DISCUSSING SINGLE SIDEBAND

TECHNIQUE OF SSB—ADVANTAGES OVER AM—POWER COMPARISON AND RATING—RECEIVING SSB SIGNALS

Part I

B. A. WATLING (G3RNL)

It is hoped that this new series of articles on SSB will lead many AT-station operators still content with AM into the realm of Single Sideband working before the state of our communication bands forces them to make the change. The superiority of SSB in comparison with AM as a mode of transmission has been emphasised in these pages for years, and is nowadays accepted as fact in radio amateur circles—though often without any clear understanding as to why the difference should exist. Unfortunately, SSB has all along been wrapped in a sort of mystique of its own, where no mystery or misunderstanding need be. The aim of our contributor is to reduce the technique of Single Sideband operation to understandable proportions, within the grasp of any radio amateur accustomed to AM phone working.—Editor.

THIS is not aimed directly at converting you to SSB—that is up to you. The sole object is to try to introduce to you some of the techniques involved in this mode of transmission. The methods and procedures used are not any more *difficult* than AM or CW. but the *are* different and far more critical. Stability of VFO's become a prime consideration. Small degrees of drift and/or frequeqcy modulation can go almost unnoticed with an AM transmitter: on SSB you just will not put out an intelligible signal.

If you already work AM Phone then SSB will open a completely new aspect of Amateur Radio. Stations you work that you consider rather in the DX category will become locals. More stations become available to work. Have you ever called CQ on 80 metres in the evening on AM after listening round to find nobody strong enough to call? If nobody comes back to your CQ next time just switch in the BFO. turn down your RF gain. open up the audio and listen between 3700 and 3800 kc. You'll be amazed!

But what about 20 metres? It is not exceptional to find nothing on the AM section while the SSB area is packed solid with DX.

PART 1—THEORETICAL CONSIDERATIONS

The Concept of Sideband

Amplitude Modulation. The name doesn't help in the understanding of sidebands. But it is difficult to think of a suitable replacement. Unfortunately, a lot of students of radio were taught that an RF amplifier is modulated by varying the HT at audio rate (OK so far) thereby varying the amplitude of the output in sympathy with the audio. That's it, they say! It must be all. Let's look at the make up of a 100 per cent modulated carrier, as shown in Fig 1.

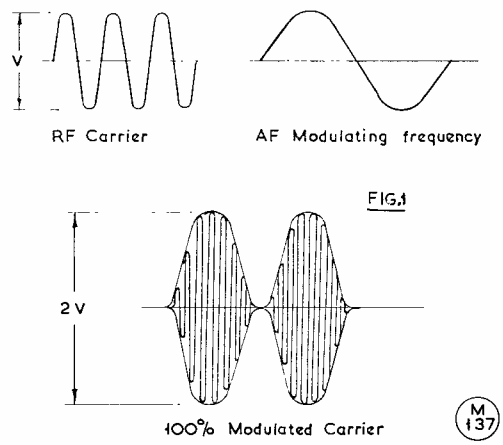

(Yes, but what about these sideband things?) No such thing! Nothing to do with it! (In other words, he doesn't know.) Let's see how a receiver detects this modulated carrier. It appears at the detector, as in Fig. 2. Half of it is chopped off (Fig. 3), the RF is filtered out and the DC component is lost. as in Fig. 4, leaving us with the original AF that we started with! Nothing to do with sidebands! Just one frequency the amplitude of which varies in sympathy with the modulating signal.

This sort of explanation sounds convincing enough, but if that was all, SSB communication just wouldn't be possible!

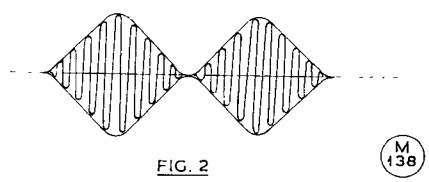

Sidebands. How can we prove that they exist? This can be done quite easily with a modulated signal generator and a selective receiver.

Tuning over the signal generator frequency with the receiver, its selectivity set at maximum, *i.e.*, minimum bandwidth—say 100 c.p.s., an S-meter

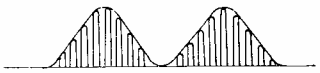

M 139

FIG. 3

will reveal three peaks (or more if the modulating frequency isn't a sine wave). The centre peak will be the largest. The other two will be of the same amplitude, and if the signal generator is modulated 100 per cent the two frequencies will be 6 dB down from the centre one. If the receiver has enough calibrated bandspread such that the frequency separation can be measured it will be found that the two side frequencies are separated from the centre frequency by an amount equal to the modulating frequency. If we call the centre frequency *fc* and the modulating frequency *fm*, then the three frequencies are: *fc*, *fc* + *fm* and *fc*−*fm*. (That looks familiar!)

M 140

FIG. 4

A spectrum type diagram shows this quite clearly, as in Fig. 5. Note that *fc* being 6 dB greater than the side frequencies means that *fc* is twice the voltage of these. If *fc* is the carrier frequency then *fc* + *fm* is termed the Upper Sideband *(USB)* and *fc* − *fm* is the lower Sideband *(LSB)*.

These three frequencies remind us a little of our early learning of superhet mixers. And so it should! The PA stage is just a mixer. It mixes the carrier frequency with the modulating frequency. Remember back when you were first taught about mixers? Well, to refresh your memory a mixer must be a non-linear device. That is one of the reasons why we use a Class-C PA.

M 141

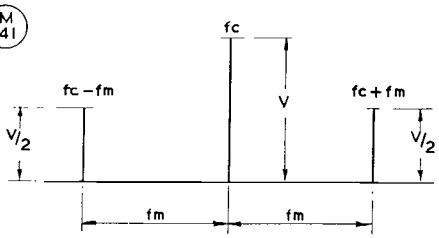

FIG. 5

An AM transmission would be more accurately described as Double Sideband Full Carrier.

How do we arrive at that 100 per cent modulated envelope? Easy, but we have to get a little complicated here and discuss this in terms of vectors. A vector is a line representing a sine wave. Its length represents the amplitude; its speed of rotation (anti-clockwise) represents the frequency. A carrier frequency modulated 100 per cent by a sine wave produces three sine waves in the RF spectrum. If we take the carrier *fc* as the reference and draw that as being stationary, then the two sideband frequencies are drawn one faster than *fc* (the USB) and the other slower (LSB), as indicated by Fig. 6.

M 142

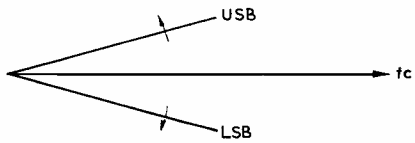

FIG. 6

[over

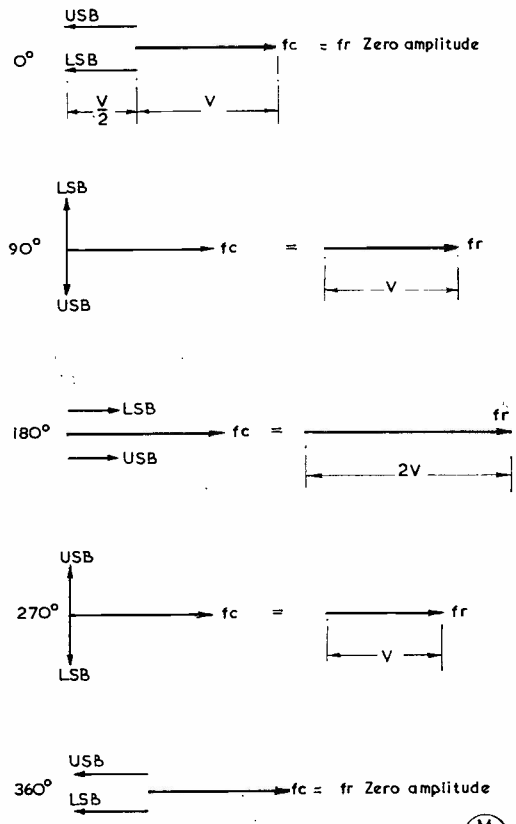

FIG. 7

M 143

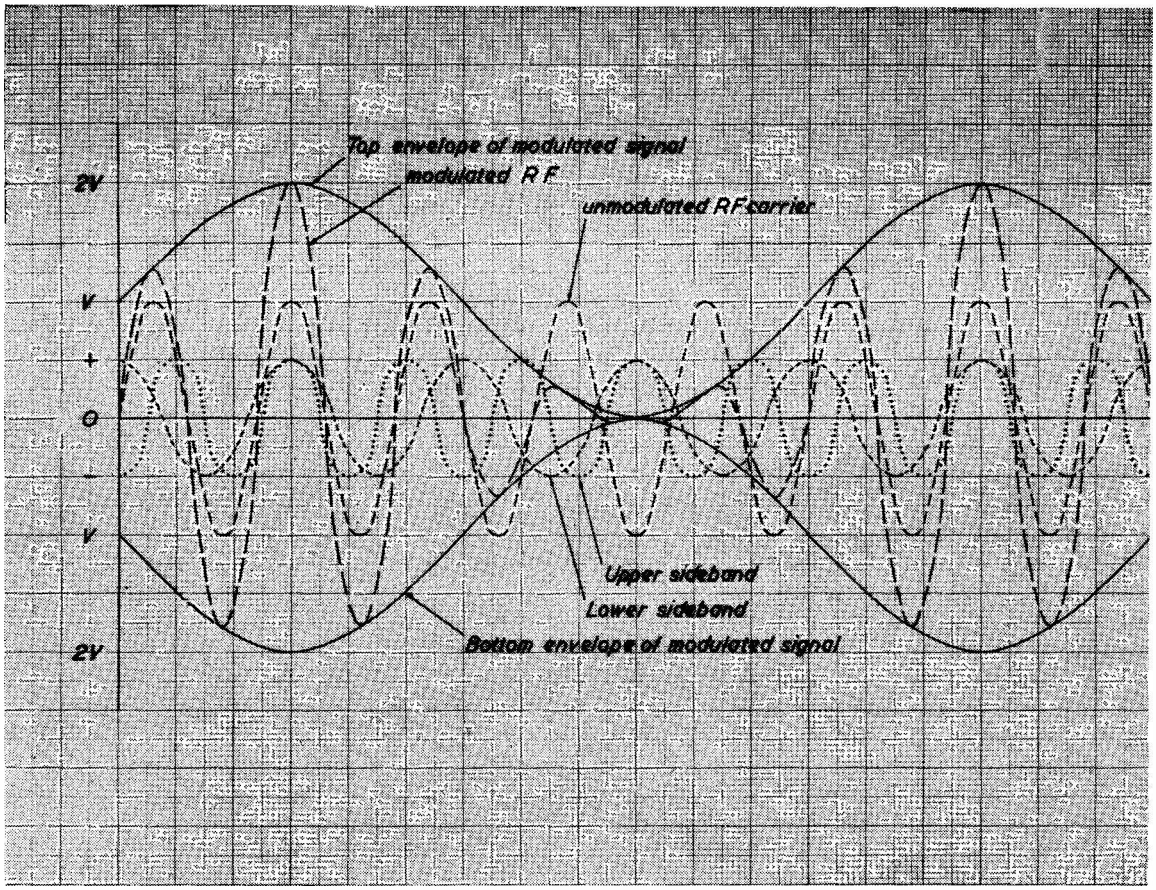

Fig. 8. Careful study of this sketch, with what has been discussed in the text up to this point, should enable the sideband and carrier relationships to be unravelled, essential to a clear understanding of the operation of a Sideband transmitter.

The vectors representing the USB and LSB are half the length of *fc*. The angle between the vectors represents the phase difference at that instant.

If instantaneous positions of the vectors are resolved and plotted through 360° rotation of the sideband vectors, then we can plot the resultant amplitude at that instant, as in Fig. 7.

At 0° the resultant signal *(fr)* is zero amplitude; at 90° it is the same amplitude as the original carrier; at 180° twice the carrier amplitude and so on. Compare this with a 100 per cent modulated envelope diagram. The same! If the vectors are plotted at smaller increments then that representation will follow exactly the envelope diagram.

To prove that vectors are easy let's look at a diagram of 100 per cent modulated AM signal drawn as sine waves, as in Fig. 8.

With speech modulation the two sidebands stretch out either side of the carrier frequency. These sidebands are mirror images of each other. *Only the sidebands carry information.* The carrier is there purely as a reference vehicle, just like the paper this is printed on. Only the inking carries the information.

Let's see, then, the theoretical gain of SSB over AM. One says "theoretical" because in practice things do not usually work out quite the same. In fact, with SSB the gain in practice appears to be more than the theoretical figure!

Just re-capping, the peak voltage of a 100 per cent modulated AM signal is twice the unmodulated carrier voltage or four times the unmodulated carrier power ($P \times V^2$). If your unmodulated output is 10 watts then, when you 100 per cent modulate, your maximum instantaneous peak envelope power (p.e.p) output is 400 watts. In terms of input, 100 watts output can be supplied by a PA in Class-C at 66⅔ per cent efficiency running 150 watts DC input. The extra input power to provide 400 watts p.e.p. output (600 watts p.e.p. input) is provided by the modulator which doubles the PA anode voltage on peaks. This does not necessarily mean that we can use the same valve

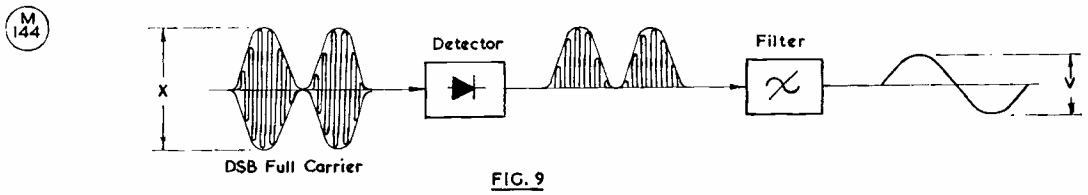

FIG. 9

with twice the anode voltage; some will not stand it.

One other point, PA's for SSB must be linear amplifiers, *i.e.*, they must reproduce exactly at their output an enlarged version of the input signal with no distortion. Class-C is out! Class-AB_1 is popular for relatively low power; this class needs no driving power, *i.e.*, no grid current. There's one TVI stopper! You could run to the legal limit with a PA in AB_1 with only an EF80 driving it! Class-B however is generally used for the higher powers because it is more efficient than AB_1, such an amplifier being driven by a lower power AB_1 linear. The efficiencies of AB_1 and B operation, however, are less than Class-C used for AM. Don't let this deter you, though. We in the U.K. are licensed for SSB on *output!* The G.P.O. tell us to do it this way:

> Take one Class-C PA running 66⅔ per cent efficient and load this to 150 watts DC input (100 watts output). Using a 'scope on the output, note the deflection. Now when on SSB, voice peaks must not kick up the 'scope to more than twice what it was.

This is, of course, exactly the same as would happen in AM working. The regulations are saying, in effect, that our legal limit is 400 watts p.e.p. *output*, irrespective of what the input is; we could run 15 kW input if that were required to produce the 400w. p.e.p. output.

The gain of SSB over AM is worked out as follows: Consider first what a DSB full carrier (AM) signal will produce into the audio amplifier section of your Rx, as shown in Fig. 9 above.

If we remove one sideband then the other must be doubled in order to modulate the carrier 100 per cent with the same p.e.p.—*see* Fig. 10.

If now the carrier is removed then the remaining sideband can be doubled in voltage for the same p.e.p. At the Rx carrier must be re-inserted. If we do this in the final IF amplifier, then a standard AM detector will suffice. The re-inserted carrier level must be at least as big as the incoming sideband signal, as in Fig. 11. The voltage output from the detector is twice as much as from the original 100 per cent modulated AM. Twice the voltage means a gain of 6 dB.

The spectrum space taken up by this single sideband signal is only half that of DSB. Therefore, a further theoretical 3 dB of gain can be achieved by the improvement in signal-to-noise ratio. (This, of course, is only evident if the receiver bandwidth can be reduced.) This extra 3 dB becomes debatable because you could receive a DSB signal with this increase by decreasing your receiver bandwidth. Generally, the filters in SSB rigs are arranged so that the audio spectrum is from about 300 c/s to 3 kc. Some even reduce the upper limit to about 2 kc. This is all that is needed to provide good communication quality. (We're not after hi-fi in this context.)

Receiver Considerations

Now we're transmitting an SSB signal (you'll see *how* later) what does it sound like on a receiver? Well, if you try to tune it in the same as an AM signal it won't sound very good. A lot of quacking and gurgling! We must put the carrier back in. That's what your BFO does. If it is inserted where the suppressed carrier was—in fact, mix it with the remaining sideband, then an ordinary AM detector will resolve it—and this, of course, is how many people take Sideband. However, the ratio between the received sideband voltage and the re-inserted carrier voltage is important—in other words, the level of BFO injection. With a 100 per cent modulated carrier the sideband is half the voltage of the carrier. If it is more than half, distortion will result. Well, the same holds true when we re-insert carrier at the receiver. The *least* distortion occurs when the carrier is *several times* greater. But receivers do not usually have the facility for varying the level of BFO injection. It is necessary, therefore, to adjust the RF gain control to reduce the received sideband to the correct level—alternatively, to have some method of increasing, or controlling, BFO injection.

The other important and fairly critical point is the *frequency* of the inserted carrier. If an upper sideband (USB) signal is being received with the carrier too high in frequency, everything will sound low pitched. To resolve your first SSB signal on an ordinary communications Rx not having a product detector, the following procedure should be adopted:

(1) Tune the receiver over an SSB signal until you get maximum deflection on the S-meter,

(2) Turn down the RF gain and the AF gain up to maximum; adjust the RF gain until you can just hear the signal,

(3) Switch on the BFO and vary its frequency until a natural sounding voice emerges. Use the RF gain as the *volume* control—thus, you will automatically adjust the received signal to your BFO injection level.

If you did that on 20, 15 or 10 metres then if you tune your receiver HF the voice will get

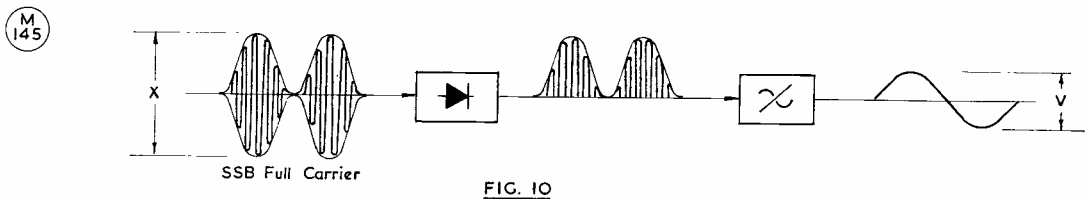

FIG. 10

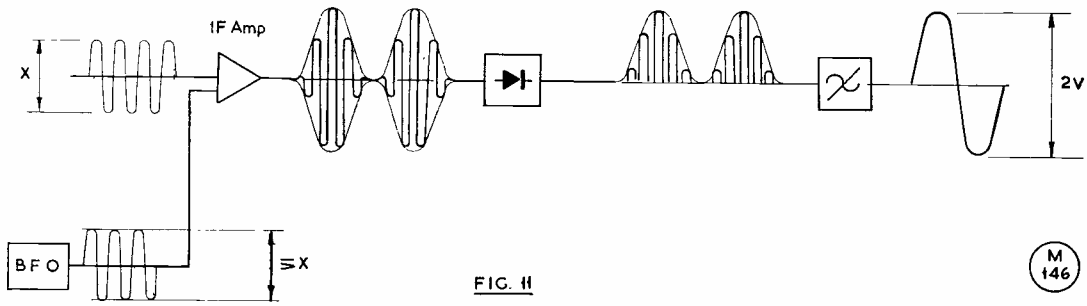

FIG. 11

progressively deeper—because the international convention is that USB is transmitted on these three bands and therefore that BFO setting will be OK for all of them. All you need to do to get other stations is to tune your receiver over the signal (with the BFO still on) until the voice sounds natural.

SSB transmitters on 160, 80 and 40 metres transmit LSB. The BFO must be switched off again and a signal tuned in for maximum S-meter reading, thereby centring it in the passband of the receiver. The BFO can then be switched in and adjusted until the voice once again sounds natural. It is as well to mark the two positions of the BFO. This facilitates quicker band hopping.

Receiver stability is of prime importance. Drift will show up as a change of voice pitch. More than 50 c/s of frequency change could make the signal unintelligible.

Most communications receivers will give perfectly adequate performance when properly used for SSB reception. For more serious listening the least that should be done is that the BFO injection should be increased, with slow-motion on the variable pitch control. More drastic modifications could include a product detector in place of the standard AM detector. The product detector introduces far less distortion, making an outstanding difference to the received signal—*see* SHORT WAVE MAGAZINE, January 1964.

More of this later. How about some circuits. We'll see next time how an SSB signal is generated.

(To be continued)

This is the new "Lektrokit" LKU-331 variable power supply unit, which gives output over the range 0-30 volts DC, at a maximum current loading of 0.5 amp., with overload protection. The output is floating, which means that either pole can be taken to earth.

DISCUSSING SINGLE SIDEBAND

PRACTICAL CONSIDERATIONS — CARRIER SUPPRESSION — TYPES OF BALANCED MODULATOR — FILTER REQUIREMENTS — STARTING TO CONSTRUCT

Part II

B. A. WATLING (G3RNL)

The first article in this new series on Sideband appeared in our issue for December last. It is hoped that by careful reading those who do not at present quite understand basic SSB techniques will be able to start on the construction of Sideband equipment—that, at least, is the aim of the series.—Editor.

IN the majority of Sideband transmitters the SSB signal is generated at a fixed frequency and then heterodyned to the required amateur band. Frequency *multiplication* should not be tried because the transmitted signal is only intelligence and doubling that does not mean you will get any more!

Probably the most common start-frequency is 455 kc for original generation of the signal. If this is mixed with a VFO, running at 3045 kc to 3545 kc, then the sum of these covers the 80-metre band. Operation on other bands could be obtained by switching the VFO. But this is most undesirable, because VFO stability is of prime importance. It would be better to heterodyne the 80-metre signal into the other bands. With this method automatic sideband selection can be effected for the correct bands, *e.g.*, if the original SSB signal is LSB on 80m., then an oscillator which adds to, or is subtracted from, that frequency will still provide LSB output. If the 80m. signal is subtracted from the oscillator then sideband reversal will occur. This then can be used for 20, 15 and 10 metres. Another useful fixed frequency for generating the SSB signal is 9 mc. When mixed with a VFO running 5·0 mc to 5·5 mc this will produce 14 mc (9 + 5 = 14) and 4 mc (9 − 5 = 4). As 80m. and 20m. are the two most popular bands this could be a useful arrangement. One other generator frequency that is perhaps worth mentioning is 8 mc. This, mixed with 6 − 6·5 mc, provides the 20m. and 160m. bands. (Work it out for yourself.)

As for VHF, it is a relatively simple matter to take the output from an HF band transmitter and mix this up to either four metres or two metres —*see* SHORT WAVE MAGAZINE, July, 1962.

The steps taken to produce an SSB signal are, first, to eliminate the carrier and at the same time produce the two sidebands. A bandpass filter is then used to accept the desired sideband and eliminate the unwanted one. This filter should not exceed a bandwidth of 3 kc at 6 dB down—and the steeper its skirt the better. Commercial filters can be obtained at quite reasonable prices, centred on either 455 kc or 9 mc. Alternatively, you could build your own using surplus crystals. However, this can be a tedious and frustrating process, particularly where

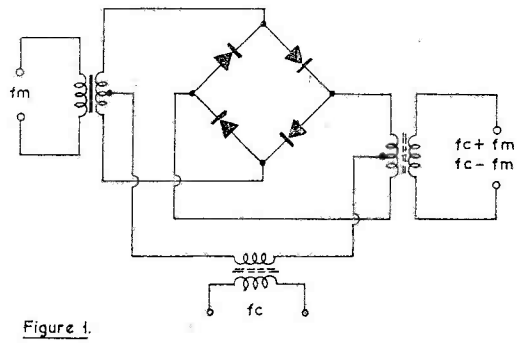

Figure 1.

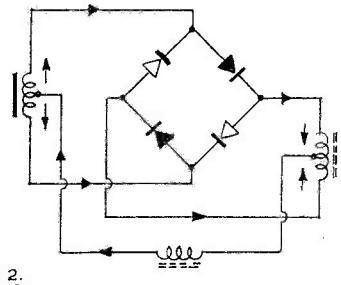
Figure 2.

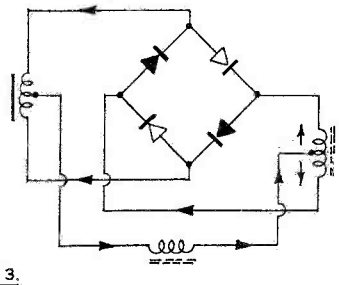
Figure 3.

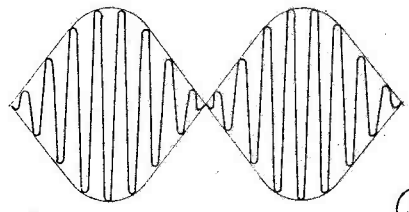
Figure 4

M 148

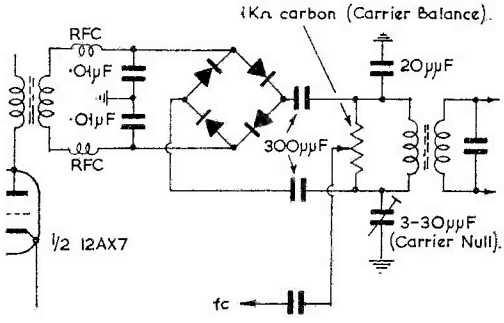

Figure 5.

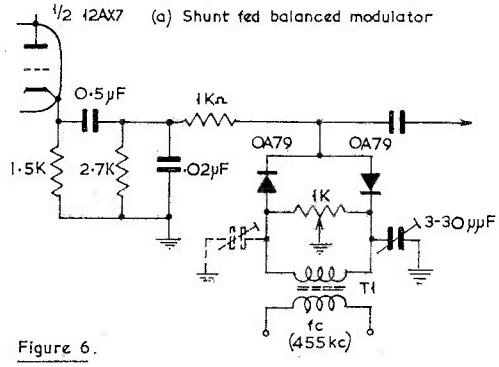

Figure 6.

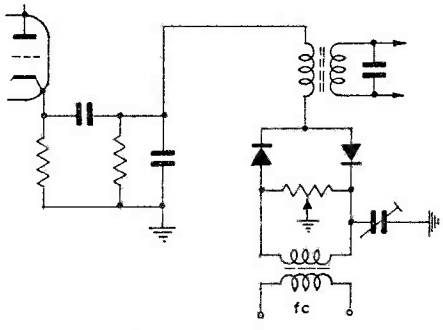

Figure 7

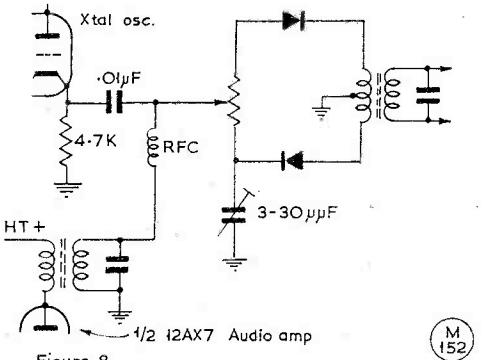

Figure 8

equipment for measuring frequency accurately and plotting bandpass characteristics is relatively primitive.

Suppressing the Carrier

This is performed by a balanced modulator—in effect, a mixer which produces, from a carrier and audio, a double-sideband suppressed-carrier signal (DSB). Many different circuits are in use these days so only the more common types need be discussed.

The 4-diode Ring Bridge balanced modulator: The basic circuit of this is shown in Fig. 1. It has been used successfully for many years by the G.P.O. However, for amateur use, it is not considered necessary to go this far. To get the best results matched diodes are required. With no audio applied the carrier is balanced out in the output transformer.

Diagrams Fig. 2 and Fig. 3 show the conditions for both half-cycles of *fc*, as at Fig. 2, 1st half-cycle, and Fig. 3, 2nd half-cycle.

(What happens now when audio is applied ?) Well, this will unbalance the bridge by causing one of the two diodes, at that particular time, to conduct more and the other one less—*fc* and *fm* will mix and the output will contain the sum and difference frequencies only. (What does the output look like ?) Remember the vector diagrams on p.595, December ? Well, if you remove the carrier frequency from that and resolve the two sideband vectors we can arrive at the envelope shape, which is as shown in Fig. 4 here.

It may, from a cursory glance, look to you like an AM signal—but it isn't. More careful scrutiny will reveal that the RF inside the envelope changes phase at the cross-over point. Looking at the vector again one half-cycle will produce the resultant vector pointing one way while on the other half-cycle the resultant will be pointing exactly 180° around.

It is necessary for practical circuits to have the carrier at least ten times as large as the audio to prevent distortion. In fact, the greater the ratio the better. The limiting factor is how much you can suppress the carrier.

At Fig. 5 is a practical circuit utilising this type of balanced modulator. All the audio stage need be is a single 12AX7. Compare that with your 100 watt modulator ! The diodes used should be matched for both forward and reverse resistance. OA79's, or similar, will do the job nicely. The carrier balance potentiometer must be a carbon track type. Wirewounds are *not* suitable. The carrier *null* trimmer should be adjusted, after the balance pot. is set up, for minimum carrier output. The audio transformer could be a standard output transformer to match a 15-ohm speaker. One with an output impedance of 500 ohms would be better.

Developments based on this type of modulator

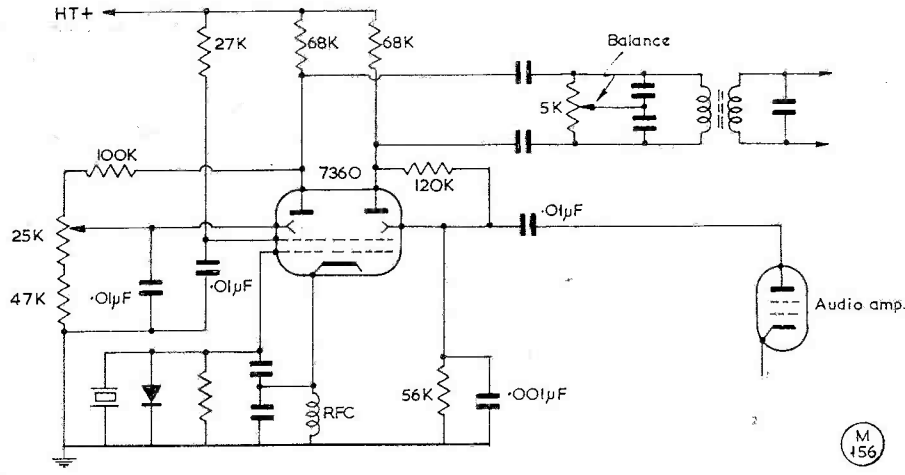

Figure 9

have produced simpler versions fully capable of suppressing the carrier to the required degree.

Two-diode Balanced Modulators are most commonly used in amateur SSB equipment. The two forms it takes are the series fed and the shunt fed, as shown in Figs. 6 and 7.

T1 can be a standard 465 kc IF transformer with the secondary removed. In place of it about 80 turns, 40 each side of the primary, should be wound on. If adjustment of the carrier *null* trimmer does not improve the carrier suppression then it should be connected to the other side of the carrier balance potentiometer (shown dotted).

One other circuit that is very popular in the States is given in Fig. 8. A circuit that will produce results far superior to those previously described uses a 7360 beam deflection valve. This method, of course, is far more expensive than diode circuits, but deserves a mention for its interest, and Fig. 9 shows the arrangement. The valve doubles as an oscillator and balanced modulator. The diode is necessary to prevent the control grid being driven too positive.

The electron beam leaving the cathode is split into two by the beam-forming plates which guide their part of the beam on to the associated anode. Balance is obtained by fixing the potential on one plate while the other can be varied to adjust its associated anode current until it is equal to the other. As with the diode modulators, the balance is upset by the application of audio. This is applied to one of the beam-forming plates and on the positive half-cycle aids the fixed potential while during the negative half-cycle it opposes it, thereby unbalancing the circuit.

Various other arrangements can be used with a

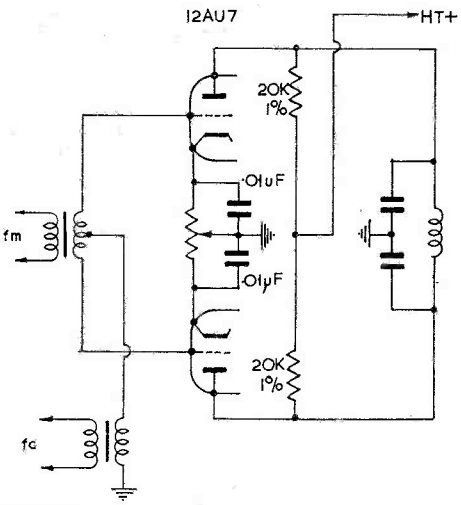

Figure 10

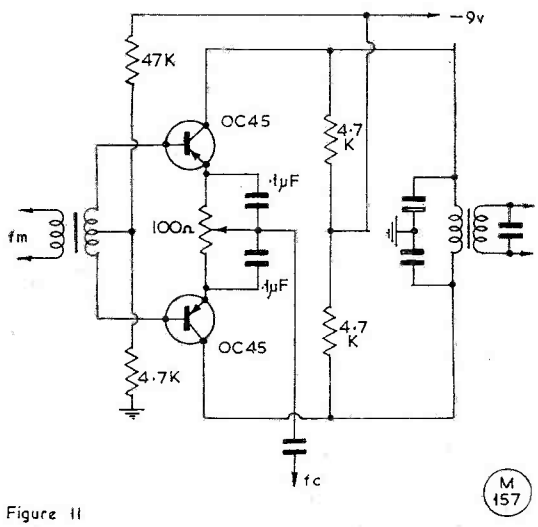

Figure 11

twin-triode (12AU7, 6SN7, etc.) or two transistors.

Some typical circuits are shown in Fig. 10 (a valve type balanced modulator) and Fig. 11, which uses transistors.

We now have a signal consisting of two sidebands only with the carrier suppressed by about 40 dB down from the peak—*see* Fig. 12.

This signal as it is could be transmitted, but the receiving of it is a little tricky. Not only do you have to get the re-inserted carrier at the correct frequency, but also at the correct phase for undistorted reception. Don't be put off completely. It *can* be received by an ordinary communications receiver—it's just that it will not sound so good as SSB. If you do decide to go DSB while you are waiting to buy a filter, then a tip that is useful to remember is to cut the low frequencies of your audio at about 300 c.p.s. and below. Otherwise, the two sidebands will beat together and produce a horrible rumbling noise with your signal.

About the Filter

What do we need a filter for? To accept one sideband and reject the other. Let's suppose we require to keep the lower sideband from an original carrier at 9 mc. The response curve of the filter must accept frequencies from 8999·7 kc (300 c.p.s. below the carrier) to 8997 kc and *reject all others.* The ideal response curve of a filter with the rough positioning of the carrier is as in Fig. 13, which shows the ideal curve shape—and some filters can get very near it. You could arrange, using just one filter, to switch from upper to lower sideband by switching the carrier oscillator from one side of the passband to the other. A more practical shape of the filter curve with the carrier positions for USB and LSB appears as Fig. 14.

The way these shapes can be obtained is discussed in the next section. First of all, let's look at a block diagram and then the circuit of a fixed-frequency Sideband generator section which, by the fitting of the appropriate RF transformers, can be used for 455 kc, 9 mc or what-have-you. (Fig. 15.)

A useful way of building a Sideband rig is to construct it in sections, on separate chassis. This means that if you want to change the design or do any mods. at a later date you don't have to cannibalise the whole lot. Let's have a look at the circuit shown in Fig. 16 and then discuss a few points about it.

The filter assembly (which will include the components required to match it to the balanced modulator) will be discussed later. Let's assume for the moment that we will be using a filter centred at 455 kc, and consider T1 and T2. (The same techniques will apply to any other frequency.)

For 455 kc T1 and T2 can start off as standard 465 kc IF transformers. For T1 its secondary is removed and replaced by about 80 turns, 40 each side of the primary, thereby distributing the capacity more evenly. About 4 volts of RF output is required from this secondary winding. T2 is simpler. Remove the capacitor tuning the secondary and

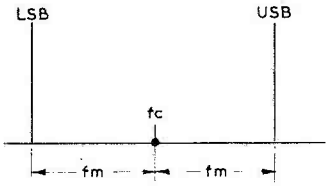

Figure 12

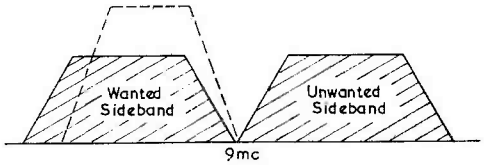

Figure 13

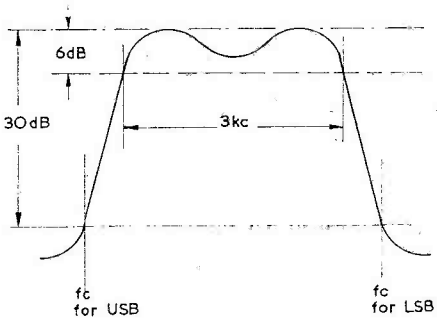

Figure 14

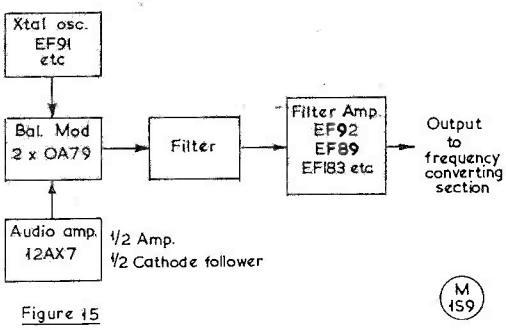

Figure 15

replace with two others (C16 and C17 in Fig. 16) of twice the value of the one you removed. These can be placed outside the can if need be, providing the leads are kept short. This then provides us with a push-pull output with a capacitive centre tap to which the VFO output is fed.

In the circuit diagram a link is shown connecting the bottom end of V3 grid resistor to earth. This is put there so that later, when a form of AGC

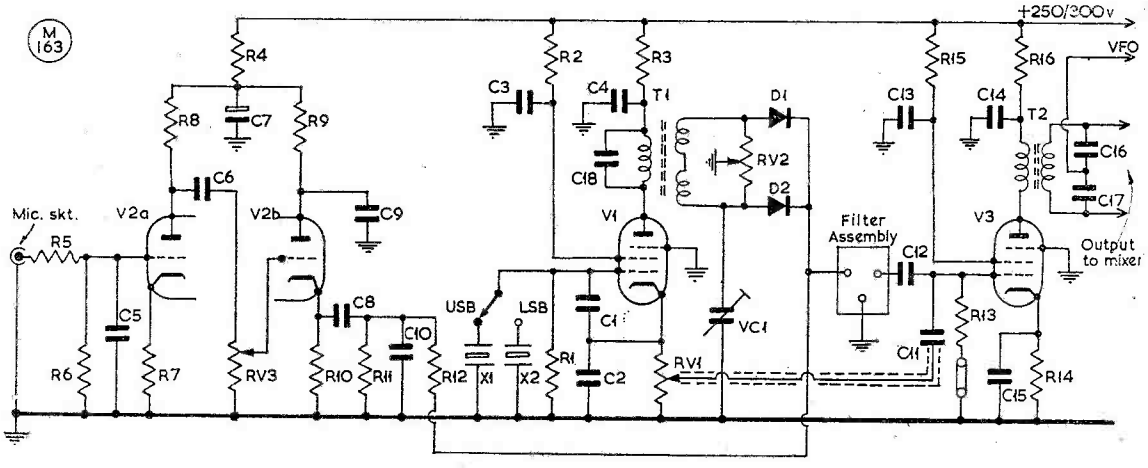

Fig. 16. Circuit Diagram for a fixed-frequency Sideband Generator

is added, it can be fed to the bottom of R13, thereby controlling V3.

No constructional details are going to be given, but a rough layout of the chassis for this section may be useful, and is shown at Fig. 17.

The cut-out for the filter assembly enables this to be made and/or modified later without disturbing the rest of the section. The cut-out for the control circuitry likewise allows this to be assembled separately, and initially can be simply a single-switch press-to-talk (PTT) control, perhaps later replaced with a more sophisticated voice-control circuit (VOX). A suggested arrangement for this type of design is to have a plug at the rear, fixed to chassis to make all the interconnections between chassis. A skeleton framework for the complete item could be made with runners so that each chassis, with its own front panel section, could slide in and plug into a socket panel at the rear, behind which all the chassis interconnection wiring is done.

This constructional arrangement does enable the rig to be easily modified. Just pull out a chassis. If you're the type who likes to build a prototype before the final version, what could be easier than this way ?

Now you've got to thinking about it, why not go out and buy a chassis then ? Go on—get the tools out and get on SSB. You'll never regret it !

(More to come)

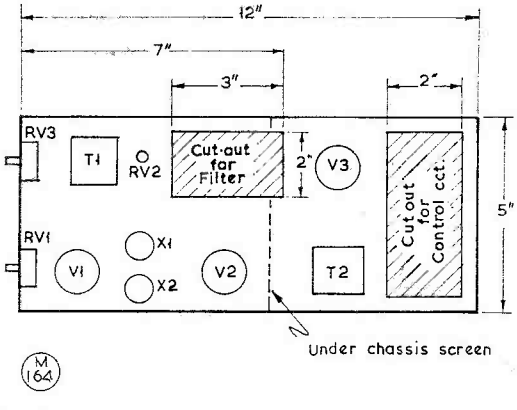

Fig. 17. Suggested layout for a fixed-frequency Sideband Generator. Any other arrangement would do as well.

Table of Values

Fig. 16. Fixed Frequency Sideband Generator

C1, C2	= ·002 μF	R6	= 1 megohm
C3, C4, C13, C14,		R7, R12	= 1,000 ohms
		R10	= 1,500 ohms
C15	= ·01 μF	R11	= 2,700 ohms
C5	= 47 μμF	R14	= 220 ohms
C6	= ·001 μF	RV1	= 1,000-ohm, log.
C7	= 16 μF	RV2	= 1,000-ohm, lin. (carbon)
C8, C9	= 0·5 μF		
C10	= ·02 μF	RV3	= 0·5 megohm, log.
C11	= 10 μμF	D1, D2	= OA79 (matched pair)
C12	= 470 μμF		
C16, C17	= *see text*	X1, X2	= Filter assembly, T1, T2 as required (*see text*)
VC1	= 3-30 μμF		
R1, R5, R8, R13,			
R15	= 100,000 ohms	V1	= EF91
R2	= 47,000 ohms	V2	= 12AX7
R3, R9,		V3	= EF92, or equivalents
R16	= 4,700 ohms		
R4	= 15,000 ohms		

G.P.O. SHIP-SHORE RADIO

The Post Office, operating the world's most complex radio communications system for contact with ships anywhere on the oceans, has now added a new title to its film library. Called *Ship-to-Shore*, it deals with day-to-day operating experiences at Land's End Radio, GLD, probably the world's busiest and best-known coastal radio station, manned by a team of able and courteous operators, prepared to cope with any contingency that may arise, on either CW or Phone. The film is now available, on 16 mm., through the Central Film Library, free of charge to "any suitable organisation"—which could be your local Club. It is worth seeing.

DISCUSSING SINGLE SIDEBAND

FILTERS FOR SSB—HOME CONSTRUCTION AND ALIGNMENT —ASSESSING SB SIGNALS— SELECTING CRYSTALS— MEASUREMENT OF FILTER CHARACTERISTICS

Part III

B. A. WATLING (G3RNL)

This article will be found to contain a lot of very useful practical information on the subject of filter construction. Our contributor also discusses the selection of crystals, and a simple method of checking the performance of home-built filters. Much of this is entirely new material in the amateur context. Previous articles in this series appeared in our issues for December and January.—Editor.

WHAT factors govern the choice of frequency at which the original sideband signal is generated ? A lot of it is personal preference and of course the availability of parts. 455 kc is a very popular choice, mainly because the standard IF transformers can be used, with either the Japanese (Kokusai) or the American (Collins) mechanical filters. The Japanese filter has now come down in price and is a worthwhile buy. It does save all the frustrations of building your own. However, a home-brew filter is the cheapest and if you have the facilities for plotting bandpass characteristics then this is the answer. You could get your feet wet on SSB by using just a simple half-lattice filter with only two crystals. At some later date this could be improved with a more elaborate filter, such as two half-lattice sections in cascade. This arrangement will give you perfectly adequate sideband rejection.

For generating the original sideband signal 9 mc is also a useful frequency. A commercial filter, made by McCoy, is available at roughly the same price as the Japanese mechanical filter. A home-made 9 mc filter using only four crystals is also a very worthwhile task. Various other frequencies can be used to suit your own circuit; one previously mentioned is 8 mc. A sideband signal at this frequency when mixed with a VFO running 6 mc to 6·5 mc produces 160 metres and 20 metres.

Things that I consider with my own rig is, first, to keep the VFO frequency as low as possible. This is why I like using 455 kc. For 160 metres the VFO runs at 1345 kc to 1545 kc and for 80 metres from 3045 kc to 3345 kc. For all-band operation the 80 metre signal can be converted. Some designs do three conversions to all bands. The first conversion is to a fixed IF of about 2 mc, then to a tunable IF of 5 mc to 5·5 mc and from there to all bands. This tunable IF is a very useful frequency to play with. Two-band operation can be achieved with one crystal, *i.e.* an USB signal at 5 mc to 5·5 mc added to 9 mc provides USB on 20 metres and substracted from 9 mc gives LSB on 80 metres.

Fig. 1 opposite shows four different configurations for SSB transmitters.

Right; let's look now at the requirements for a filter. It must have a bandwidth, at the points 6 dB down from the peak, of about 3 kc. The steepness of the sides of the filter curve are also very important. This steepness is defined by the "shape factor," *i.e.* the ratio between the bandwidth at 60 dB down and the bandwidth at 6 dB down. A shape factor of 2:1 is what to aim for; even better, if possible. This figure (2:1) is met by a filter having a 3 kc bandwidth at 6 dB and a 6 kc bandwidth at 60 dB.

How about this figure of "3 kc for the 6 dB" bandwidth ? The narrower the bandwidth is at these points the more of the higher audio frequencies you will lose. A lot of rigs have bandwidths of 2 kc and this is all that is needed for adequate communications quality. It also means that three stations with 2 kc bandwidth take up only as much room as two stations having 3 kc bandwidth. This does not make much difference to you when you are transmitting but when you come to work a weak DX station with a strong 3 kc wide signal 2·5 kc away it does matter !

Before we go on to some details of filters it will be as well to consider what sort of figures one should aim for as regards unwanted sideband and carrier suppression. Sideband suppression should be at least 25 dB down and one should aim for 40 dB or more. Even if you do have 40 dB of suppression your locals on 160 metres will say "Your signal isn't any narrower than my AM transmission." If your signal is reported as being S9 + 40 then it isn't

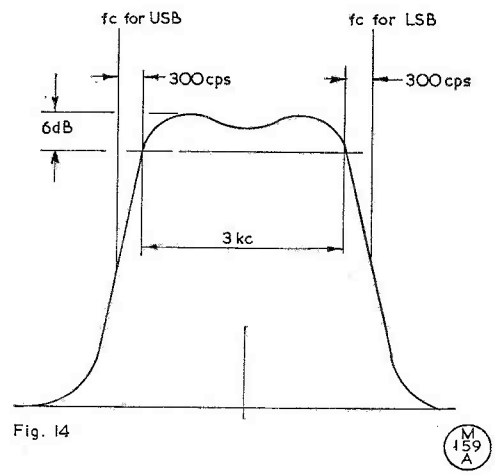

Fig. 14

On p.663 of the January issue, Fig. 14 was shown slightly incorrectly. The sketch above puts matters right, and should be noted by those following this feature.

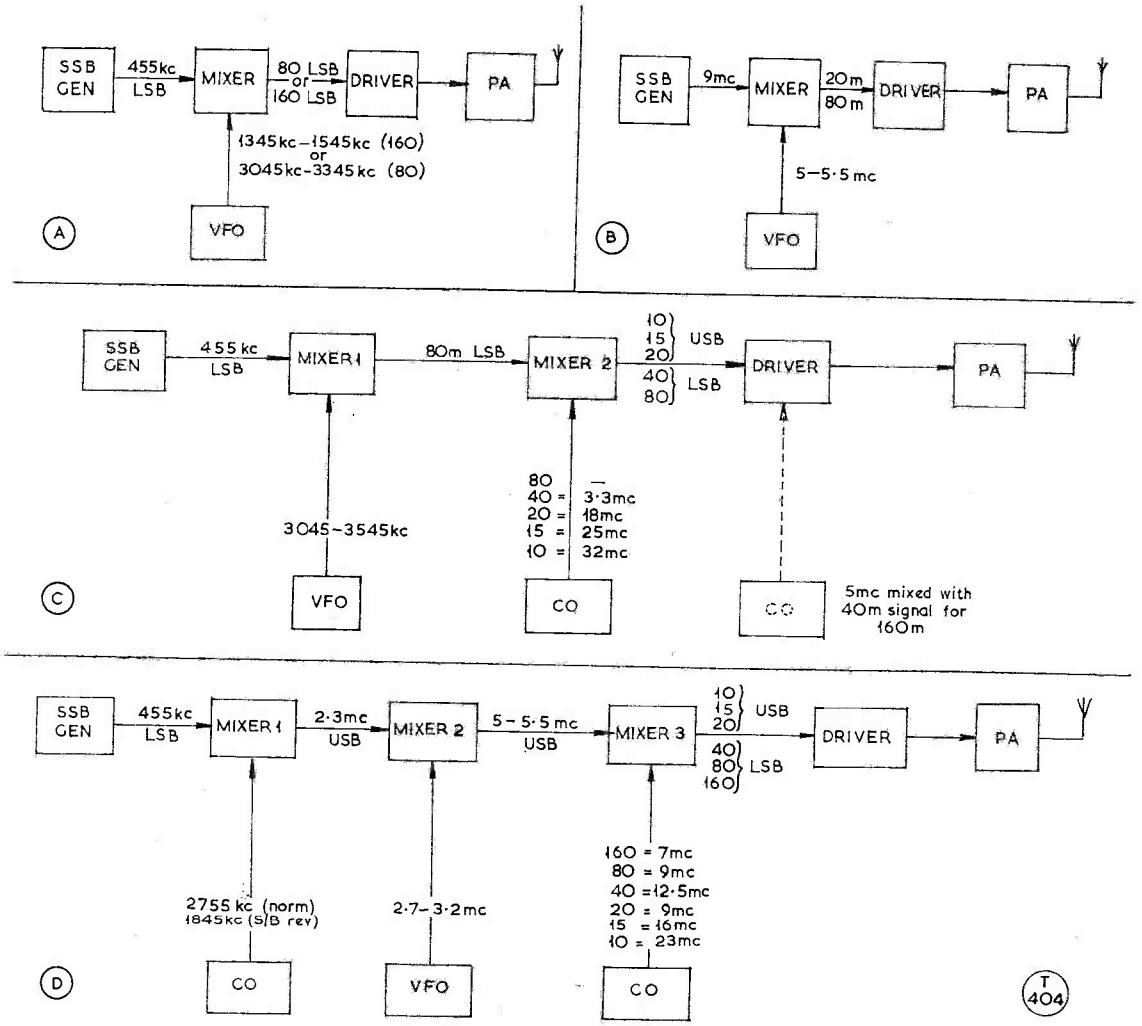

Fig. 1. Some typical configurations for SSB transmitter layouts. (A) Single-band transmitter for 80 or 160 metres. (B) A two-band Tx for 20/80m. (C) Five or six band transmitter with automatic Sideband selection. (D) A six-band Tx with automatic Sideband selection plus the facility for switching sidebands without changing frequency.

surprising. Your unwanted sideband will be S9. How about on-the-air sideband suppression reports ? These will no doubt be very misleading and conflicting. Why is this ? Several reasons : First, how many stations have accurately calibrated S-meters ? They say "Well, your wanted sideband reads S9 and your unwanted reads S2 so that means that your suppression is $7 \times 3 = 21$ dB." It could mean almost anything ! Even if his S-meter is calibrated correctly, if the filter in his Rx is not better than yours then this will cause errors in his measurements. Let's see how this happens. Diag. 1 p.738 shows what things look like when the filter in the Rx has an asymmetric shape when receiving your wanted sideband.

Then he switches over to your unwanted sideband.—Diagram 2.

It was OK when he was receiving your wanted SB because the steep side to his filter rejected whatever there was of your unwanted. What about when he tries to receive your unwanted ? His filter also accepts some of your wanted so that his AGC will operate on, and hence his S-meter will read a combination of the two. (How can I find out, then ?) Well, you could do this on your own station receiver providing :

(a) that you have a filter whose bandwidth is say 1 kc wide or less at about 40 dB or more down, and

(b) that your S-meter calibration is known.

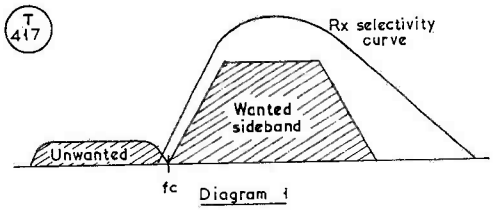

Diagram 1

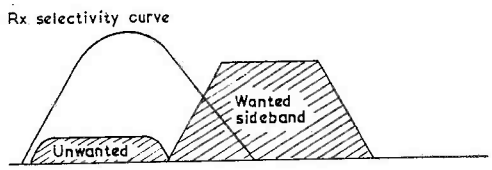

Diagram 2

It doesn't have to be calibrated accurately as long as you know what each S-point means.

Now if you take the output from your exciter, preferably immediately after the first mixer, to the Rx and inject a 1 kc tone (pure sine wave, please) into the microphone socket you will be able to find the two frequencies on your receiver. From the readings on your S-meter you can calculate sideband suppression. You should also be able to measure carrier suppression this way but you must know what level of signal, at the point you are taking off to the Rx, will drive the PA to maximum. Turn up your audio gain to that level and then measure the difference between wanted sideband signal and carrier signal.

The reason for taking the signal to the Rx *after* the first conversion is to prevent any stray signal field leaking into the receiver, causing misleading results.

You can get a rough guide from an oscilloscope. Take the RF output from your exciter to the 'scope. Now with absolutely perfect suppression an audio tone fed into the microphone socket will appear as a single frequency RF output. If another frequency is present the 'scope trace will have a ripple on it. The ratio between the peak-to-peak level of the ripple, and the level between means of the top and bottom ripple, will give you an approximation of sideband suppression. (*See* Fig. 2.) Two words of warning : first your carrier suppression must be good (60 dB or more) otherwise this too will show up as a ripple on the trace. Secondly, make quite sure that you're not overdriving any stage. If a stage is driven well beyond the point of saturation (where any further input does not increase the output) then even a DSB signal will look like pure CW.

One other misleading report you may get on the air is that of bandwidth. Fig. 3 will illustrate the reason for this. When giving sideband reports you should subtract from the indicated figure the bandwidth of the receiver filter.

You may wonder why so much has been said about what you should do once you've got your filter, without getting down to the meat of things. Well, many of us (including the writer) are so eager to get on with things that once we've read how to make it we don't bother about how to *use* it. In an attempt, which it is hoped isn't futile, to overcome this things have been done the other way round. So ; here it comes !

Low Frequency Crystal Filters (400 kc to 500 kc)

What properties do quartz crystals have that make them suitable for use in filters ? A very high Q and two resonant frequencies. Fig. 4A shows the equivalent circuit for a quartz crystal. You will see how the two resonant frequencies are obtained. Firstly, the series resonant frequency (called the *zero* or just the resonant frequency) due to L and C. This is the point where the impedance between the terminals of the crystal is at its minimum. Secondly, the parallel resonant frequency (called the *pole* or antiresonant frequency) due to L, C and Co, and this is the frequency at which the impedance between the terminals is at maximum. Fig. 4B is a typical plot of reactance against frequency showing these two points *fr* and *fa* (sometimes denoted by Fz and Fp).

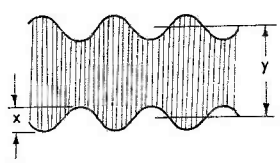

y/x	Approx. sideband suppression
10	20 dB
15	24 dB
20	26 dB
30	30 dB
50	34 dB
100	40 dB

T 405

Fig. 2. Method of approximating Sideband suppression of a tone-modulated transmitter by displaying its output on an oscilloscope.

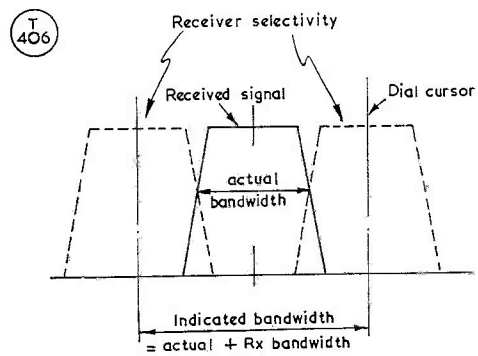

Fig. 3. When attempting to give, over the air, reports on the bandwidth of a Sideband signal, subtract from the indicated figure the bandwidth of the receiver filter.

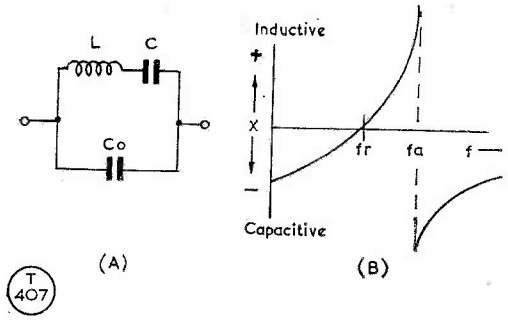

Fig. 4. At (A) is shown the equivalent circuit of a crystal. (B) is a reactance-against-frequency plot of a quartz crystal.

The object when designing a filter is to manipulate the poles and zeros so as to produce the required flat top and steep sides. An example of this using two crystals is where the pole of the lower frequency crystal is at the same frequency as the zero of the other. These then will cancel and produce a flat top. Fig. 5 shows the theoretical shape of the passband, and it will be seen that the bandwidth at the top is the difference between the series resonance of crystal A and the parallel resonance of crystal B. The snag with LF crystals around 400 kc to 500 kc is that the poles and zeros are only 200 c.p.s. or so apart, which would mean a bandwidth of about 400 c.p.s., and that isn't much good ! However, there is a solution. If we shunt the crystal with inductance the original pole and zero can be spread a little and another parallel resonant frequency introduced, as shown in Fig. 6. By using these facts a lattice filter was derived as shown in Fig. 7A and simplified to the half-lattice configuration shown in Fig. 7B.

A practical arrangement of the half-lattice suitable for use in the sideband generator described on p.664 of the January issue is shown in Fig. 8. X_2 should be chosen such that its frequency is about 2 kc higher than X_1. When buying surplus FT-241 crystals for this job consult Table I for suitable pairs, designated by their channel numbers (which is how the crystal case is often marked). To work out the

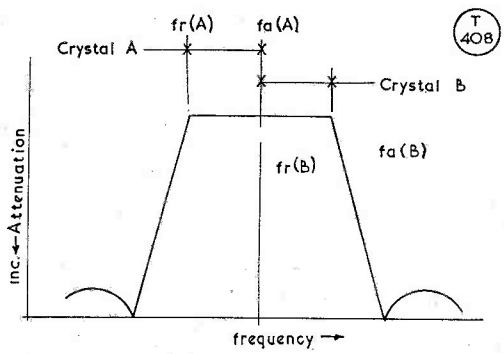

Fig. 5. The theoretical attenuation curve of a filter using two crystals, where the "fa" of the lower frequency is the same as "fr" in the higher frequency crystal.

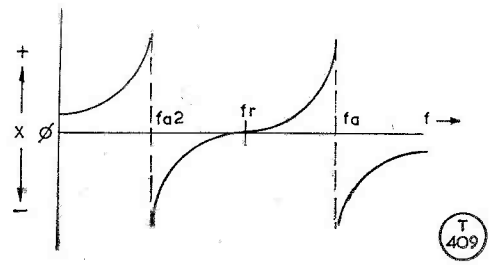

Fig. 6. The reactance/frequency plot of a quartz crystal shunted by an inductance — see text.

actual frequencies from the channel numbers proceed as follows : The *three* digit channel numbers are 72nd harmonic types and the number, *e.g.* 356, means 35·6 mc. Dividing that by 72 gives the fundamental, in this instance 494·44 kc. The *two* digit channel numbers are 54th harmonic types. If you take these two digits, *e.g.* 62, add a 2 to the front, (2)62, then the frequency of the 54th harmonic is 26·2 mc. The fundamental can be worked out by dividing this by 54, giving 485·19 kc (*see* p.742 for Table I).

Filter Alignment

Referring again to Fig. 8, VC1 will be about 2 $\mu\mu$F and can be made up by using two pieces of insulated wire, about an inch or so long, twisted together. It must be placed across the higher frequency crystal. T_1 is a standard 465 kc IF transformer with the primary modified by replacing its tuning capacitor with two others of twice the value, or values, such that they will tune it to the frequencies of the crystals used. Alignment of the filter can be simplicity itself. If you have a BC-221 and a valve voltmeter a very accurate plot of the curve can be made. Don't be put off ! It can be done with less. A set-up used at G3RNL is a home-built oscillator which, by adjustment of the coil slug, will cover about 400 kc to 500 kc. Fine tuning of about ± 6 kc either side of the set frequency is achieved by use of a tuning condenser with a slow-motion calibrated dial on the front panel of the unit. The only essential thing here is that the oscillator must be very stable. Obviously, calibration of this unit isn't easily possible for all settings of the coarse frequency control. The method of overcoming this at G3RNL is a little fiddly but quite simple. The

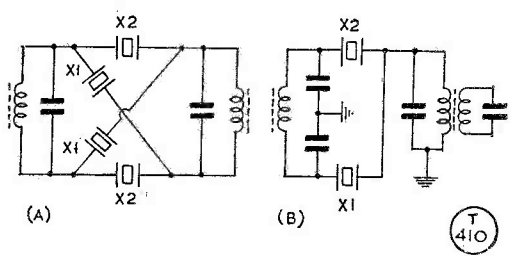

Fig. 7. Showing at (A), a full-lattice crystal filter, and at (B) a half-lattice filter.

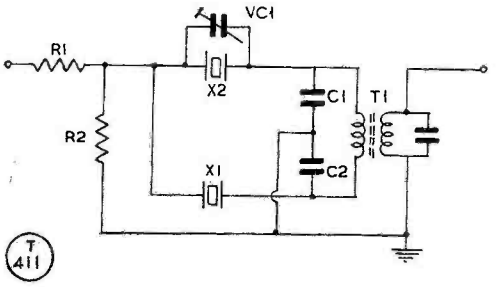

Fig. 8. Practical circuit for a half-lattice filter suitable for use in the fixed-frequency Sideband generator shown on p.664 of the January issue of "Short Wave Magazine." For proper operation, crystal frequency X2 should be about 2 kc higher than X1. Suitable pairs can be extracted from the data given in Table I on p.742.

output from this low frequency oscillator goes first to the filter under alignment and then to a mixer-oscillator which, with the use of almost any frequency crystal, will convert the LF signal to a frequency suitable for finding on the station receiver. Fig. 9 illustrates this. The station frequency standard is a Class-D Wavemeter and although this is not the most accurate device one can use, it is just about adequate as only relative frequency is required. The fine tuning on the filter alignment unit is set to mid-scale, then tune the receiver to the spot on the dial where the crystal oscillator *plus* or *minus* the centre frequency of the filter will appear, and adjust the coarse tuning of the LF oscillator until a beat appears on the receiver. (Make sure this is the correct one and not a harmonic of the LF oscillator.) The exact frequency of the LF oscillator can now be calculated by measuring, with the Class-D Wavemeter, the resultant frequency and subtracting this from (or subtracting from it) the frequency of the crystal oscillator. By swinging the fine tuning either side of mid-scale and measuring the resultant frequency the dial can be calibrated in kc either side of centre. This calibration will, however, only be reasonably accurate for that particular setting of the coarse tuning.

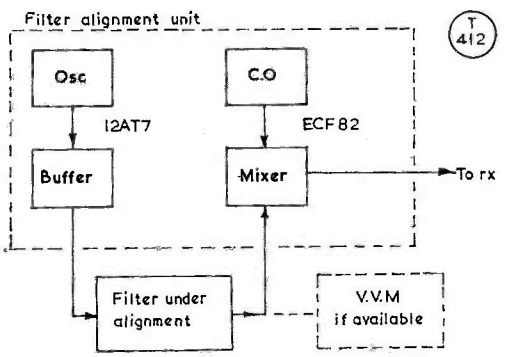

Fig. 9. Block diagram of a suitable set-up for LF filter alignment. The derivation of this arrangement is shown in detail in Fig. 11.

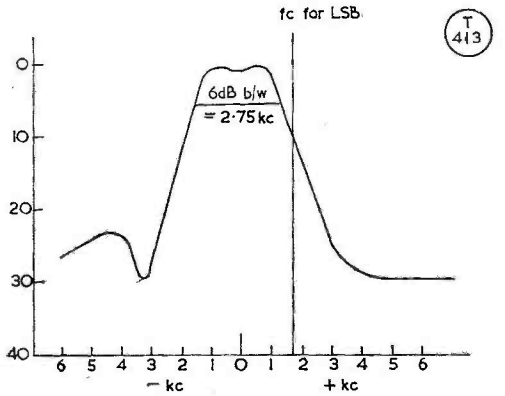

Fig. 10. Plotted passband of the half-lattice filter shown in Fig. 8, when aligned for LSB. The attenuation at 300 c/s is 19.5 dB; at 500 c/s, 22.5 dB; at 1 kc, 27.5 dB; and at 1.5 kc, 28.5 dB. See text.

Alignment Procedure

Now in order to align the filter you require a valve voltmeter or failing that the station receiver's S-meter can be used. The procedure adopted is as follows. First, detune as far as possible the cores of T_1. Swing the oscillator over the passband of the filter and you will find two peaks. Tune to the absolute bottom of the dip between the two peaks and then adjust the primary and secondary of T_1 for maximum S-meter (or valve voltmeter) reading. This is all that should be needed on the T_1 adjustment. Swing the oscillator over the passband and check that the top of the curve is fairly flat. If not, slight further adjustment of T_1 primary may be needed. A dip of 3 dB can be tolerated but anything more than that needs ironing out. Adjustment of VC1 is carried out by tuning the oscillator down the side of the passband that the carrier oscillator will be placed, *i.e.* the HF side for LSB, to a point about 1·5 kc beyond the 6 dB point, then adjust VC1 for minimum reading. Check the top of the passband again and if all is well—seal the core in the primary of T_1. The secondary core will probably need peaking for maximum when the filter is put into the rig. That's it!

Measuring Bandwidth

The bandwidth can now be worked out by tuning each side of the passband to the points 6 dB down from the peak and measuring the frequency difference as indicated on the alignment unit dial. A typical plot of the passband that can be achieved is shown in Fig. 10, while Fig. 11 is the circuit diagram of the filter alignment unit used at G3RNL. For a really comprehensive and versatile unit it could be extended by building in a valve voltmeter. But even just as it is the device can be quite useful. Several crystal sockets of differing types are fitted to the front panel and it can, when not being used for filter alignment, function as a marker oscillator by plugging in the appropriate crystal. The unit can also be adapted

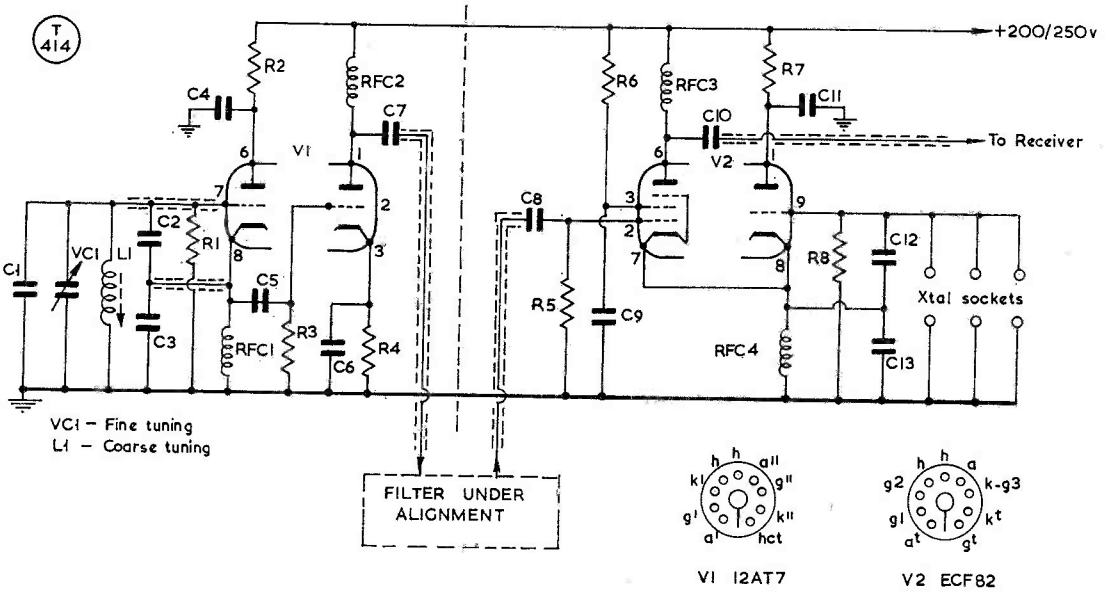

Fig. 11. Circuit of the set-up used for aligning the LF filters. Values are: C1, 150 μμF, silver mica; C2, .001 μF, s/m; C3, .002 μF s/m; C4, C6, C9, C11, .01 μF; C5, C7, C8, C10, 150 μμF; C12, 25 μμF; C13, 250 μμF. R1, R3, R5, R8 47,000 ohms; R2, R7 10,000 ohms R4 2,200 ohms; R6 100,000 ohms. RFC's 1-4, 2.5 mH RF chokes. Tuning VC1, 100 μμF. Valves V1, 12AT7; V2, ECF82.

for aligning HF filters by plugging in a crystal, or by feeding the output from a stable signal generator into the crystal socket, such that its frequency when combined with the LF oscillator comes out to the HF filter frequency.

Getting back to the half-lattice filter of Fig. 8, the carrier oscillator frequency must be decided upon. For LSB it should bt 300 c/s higher than the 6 dB point on the HF slope of the curve, as indicated in Fig. 10. A rough estimate of this frequency is 600 c/s higher than the highest-frequency crystal used in the filter. For USB the frequency chosen should be the equivalent position on the other side of the curve; also VC1 should be adjusted for that side. Theoretical sideband attenuation for telephony will be about 25 dB, which is just adequate. Slight improvement of sideband attenuation can be achieved by placing the carrier frequency further down the slope but it's not really worth it due to the reduction of the lower frequency region of your speech. (As one advertiser puts it "like voices from outer space.")

A few words of warning here when constructing these filters. Those described are a result of attempting to cut as many corners as possible. Don't try to cut any more, such as leaving the primary of T_1 standard and just adding two 10 μμF capacitors for C_1 and C_2. One other corner people try cutting is using octal valve holders instead of *pukka* crystal sockets. This was tried at G3RNL and did not give as good a shape as that shown in Fig. 10.

The filter as described is probably the easiest possible for home construction. The only other way which is easier is by using a commercial filter. The disadvantage here is that the cheapest is about 12 times as much as this simple design.

[over

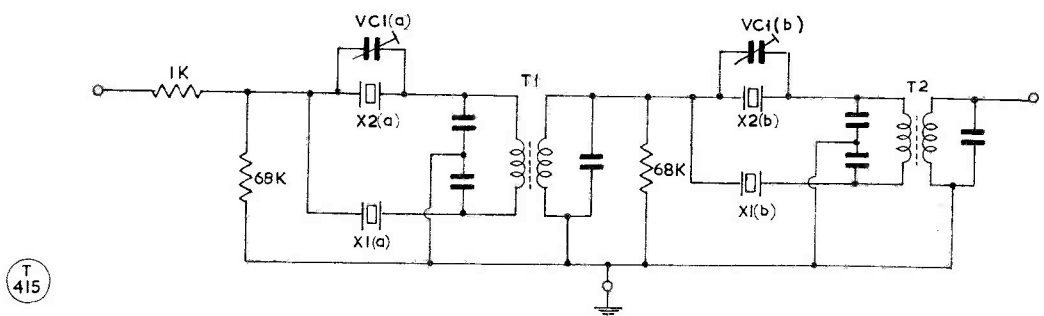

Fig. 12. The question of the filter arrangement to use can be complicated. There are various possible arrangements, as discussed by G3RNL in his text. The layout here is for two half-lattice filter sections in cascade.

TABLE I

The pairs of crystals suitable for use in the 1/2-lattice filter of Fig. 8.

Approximate Centre Frequency (kc)	X_1	X_2	Approximate Centre Frequency (kc)	X_1	X_2
402·5	289	18	452·5	325	45
403	17	291	453	44	327
408	293	21	458	329	48
408·5	20	295	458·5	47	331
413·5	297	24	463·5	333	51
414	23	299	464	50	335
419	301	27	469	337	54
419·5	26	303	469·5	53	339
424·5	305	30	474·5	341	57
425	29	307	475	56	343
430	309	33	480	345	60
430·5	32	311	480·5	59	347
436	313	36	486	349	63
436·5	35	315	486·5	62	351
441·5	317	39	491·5	353	66
442	38	319	492	65	355
447	321	42	497	357	69
447·5	41	325	497·5	68	359

Figures under X_1, X_2 headings are FT-241 channel numbers. For method of calculating exact frequencies, see p.739.

An example of how quick and easy this filter is to align is that the curve of Fig. 10 was from a filter aligned and plotted in about 15 minutes.

How about the carrier crystal? You probably will not find a channel number at exactly the required frequency. By selecting one which is a little LF of the required frequency you can edge-grind this using a paste made up of household *Vim* and *Three-in-One* oil on a piece of glass. Take hold of the crystal in the thumb and forefinger and stroke each edge of the crystal to the same degree. You should be able to shift the crystal about two or three hundred cycles. After each session, before checking its frequency, wash the crystal in carbon tetrachloride. *(Thawpit—* again !) For crystals which are too high in frequency you can either try copper plating with a jam jar of water, a piece of copper wire and a battery; or for shifting by very small amounts try a touch of lead pencil on the crystal.

The filter just described provides the minimum

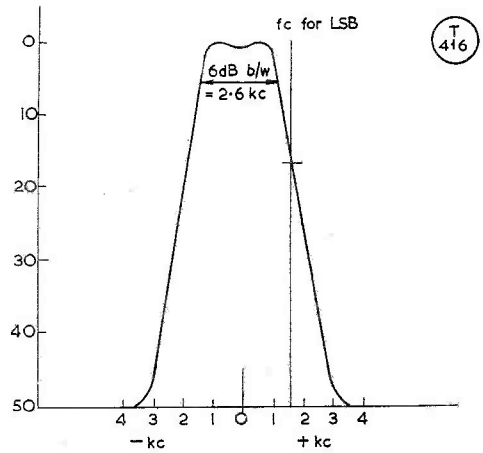

Fig. 13. The passband to be expected from two half-lattice sections cascaded as in the circuit of Fig. 12. The Sideband attenuation could be: at 300 c/s, 24 dB; at 500 c/s, 31 dB; and at 1 kc, 50 dB.

acceptable sideband suppression. For an improved signal two identical half-lattice sections can be cascaded as shown in Fig. 12. The alignment of this filter is best carried out one section at a time. The passband to expect is shown in Fig. 13. Theoretical sideband suppression is approaching 60 dB at some frequencies but this is very difficult to achieve due to the unwanted sideband leaking around the filter. Careful construction with a screen between sections and the filter components in a straight line will produce perfectly satisfactory results. The carrier crystal frequency should be selected by the same method as used in the single half-lattice section, *i.e.* 300 c/s higher for LSB or 300 c/s lower for USB, from the appropriate 6 dB point.

The other important point to make is that if, having followed this discussion, you will learn a great deal if you now set about making a filter and get a good curve out of it.

(To be continued)

AMATEUR LICENCES IN ISSUE

We are informed by the Post Office that, as at December 31, 1965, the totals of current U.K. amateur licences were as follows: Sound A—11,537; Sound B (VHF only)—312; Sound A (mobile)—1,962; Sound B (mobile)—3; Amateur TV—173. For the eleven months since the end of January last year, these figures show a nett gain of 522 in the Sound A (full licence) category; of 148 in Sound B (the G8/3's, VHF only above 2m.); of 213 in the Mobiles; and of five in amateur TV.

The most significant increase is in the G8/3's, in that they have nearly doubled in the year. The percentage of U.K. amateurs licensed /M of the total licences in issue has also increased, to about 17%.

DISCUSSING SINGLE SIDEBAND

MORE ABOUT FILTERS FOR SSB — COMMERCIAL AND HOME-CONSTRUCTED TYPES — THE COLLINS AND THE KOKUSAI — THE BRUSH CLEVITE — PRACTICAL CONSIDERATIONS

Part IV

B. A. WATLING (G3RNL)

This series was started in our issue for December last, with Parts II and III in January and February.—Editor.

BEFORE going on, it must be explained that in Part I, p.596, December, in the right-hand column for "10 watts" read "100 watts." And on p.598, it should be pointed out that slow-motion drive on the variable pitch control is not really necessary.

In Part II, Fig. 11, p.662, January, the connection from the two ·01 μF condensers should be through the primary of a transformer, with the secondary to *Fc*. And on p.664, January, D1, D2 in the main circuit diagram should be connected to show reverse polarity.

Then, as regards the caption to Fig. 17 on p.664, Part II, in fact *any* other arrangement might not "do as well"—because to get good carrier suppression it is advisable to keep the filter and balanced modulator sections in line, and to have the carrier generator as far from the filter amplifier as possible, with screening as shown.

Now to proceed. Last time, LF home brew filters were described. If you don't like the idea of making one (although you can be assured that it can be quite simple) then there are available commercial filters at reasonable prices—*see* p.79 for three types evaluated at G3RNL, two of which are mechanical *(Kokusai* and *Collins)* the other being a new type of filter using the piezo-electric effect of ceramics and produced by the *Brush Clevite Company*.

Mechanical filters are very popular these days because of their small size and excellent bandpass characteristics. Some people, however, have been heard to say that they would "never use a mechanical filter even if they were paid to"! They maintain that the quality of signal from a mechanical filter Tx is inferior to that using a crystal filter rig. When listening on the air one tends to agree with these opinions, but the reason for the generally inferior quality signal is usually because of the wrong positioning of the carrier crystal with respect to the passband. The sides can be very steep; therefore, slight wrong positioning of the carrier further down the passband can cause drastic reduction in bass response. The other point is that most of the mechanical filters used in present rigs have a bandwidth of less than 2·5 kc, whereas crystal filters are usually 3 kc or a little above. Reducing audio bandwidth down to 2·5 kc has only a marginal effect on quality, whereas below 2·5 kc bandwidth the quality does deteriorate. Don't let this put you off. A signal with a bandwidth of 2·1 kc is still intelligible and very acceptable.

There are many types of mechanical filter available, but the most popular type in this country are the *Kokusai* range. Three versions are available, these being the MF 455-10K, with a minimum bandwidth at the 6 dB points of 2·1 kc; the MF455-15K with a minimum bandwidth of 3 kc; and the MF455-10CK with a minimum bandwidth of 2·1 kc but with far superior temperature characteristics than the previous two types.

These filters are all the same size, measuring 1½in. diameter by about 2½in. high, and are supplied with a screening plate to prevent the unwanted sideband leaking across. The nominal centre frequency is 455 kc but could vary by ±0·8 kc. With each filter comes a data sheet quoting the deviation from the nominal centre frequency; the bandwidth at the 6 dB points in terms of *plus* and *minus* from 455 kc; the frequencies at the 30 dB points and the bandwidth at 60 dB, again in terms of *plus* and *minus* from 455 kc.

Fig. 2 shows a curve plotted from the information supplied with a filter used at G3RNL for some months, together with sideband attenuation figures for two different carrier positions. You will note that the shape is not quite symmetrical and that the USB figures are quite a bit better than those for LSB. As previously mentioned, the carrier positioning is very important. Some people make the mistake of selecting carrier crystals the same as the 30 dB frequencies and this is why so much variation in audio quality is heard on the air between rigs using these filters. The filter should allow an audio response of 300 c/s to, at minimum, 2·3 kc. The

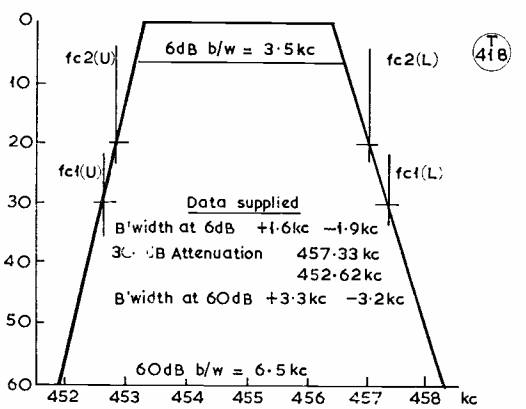

Fig. 2. Curve drawn for a Japanese mechanical filter Type MF455-15K from the information supplied on the data sheet provided.

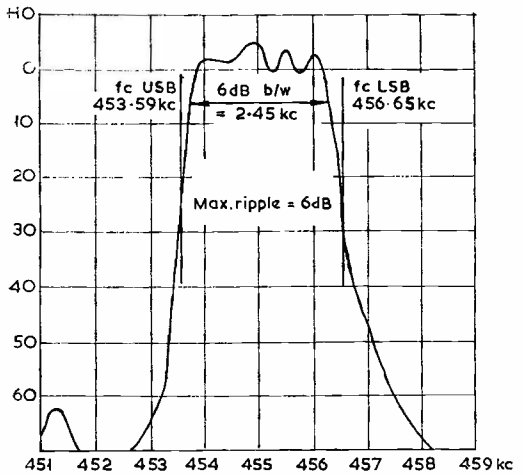

Theoretical sideband attenuation

USB	fm	LSB
51dB	300cps	35dB
64dB	500cps	48dB
71·5dB	1000cps	62·5dB

T 419

Fig. 3. Actual curve plotted for a Kokusai mechanical filter Type MF455-10K. This follows almost exactly the curve drawn from the information given on the data sheet.

lowest frequency is the important one regarding audio quality and should not be any higher than 300 c/s. The correct carrier positioning should therefore be 300 c/s beyond the 6 dB points.

Referring again to Fig. 2 and the sideband attenuation on USB for the two carrier positions shown: It will be seen that the difference is marginal but the audio response for *fc1* is about 475 c/s to 3·975 kc, compared with 300 c/s to 3·8 kc for *fc2*. For LSB the difference is even more marked, *fc2* being the correct figures of 300 c/s to 3·8 kc, with *fc1* being about 750 c/s to 4·25 kc.

From such figures one can appreciate the opinions of operators who say that they would "never use a mechanical filter." However, it is certain that they would not be able to tell the difference between mechanical and crystal filters with identical characteristics and the carriers positioned correctly. In fact, the writer is prepared to bet on it!

At Fig. 3 is shown the response of a *Kokusai* MF455-10K filter. This particular specimen is an excellent example of its type. Don't expect them all to be quite as good as this one, but even the worst unit can produce a very good signal.

One of the filters in use at G3RNL at present is a *Kokusai* MF455-10CK which has recently become available in this country. It is a little more expensive than the other type but is far superior as regards temperature stability. The plot of this filter, together with its sideband attenuation figures, is shown in Fig. 4 opposite.

Mechanical Factors

It is interesting to consider how these mechanical filters work. They comprise several metal discs resonant (physically) at the passband frequency. In order to make these discs vibrate the electrical signal must be converted into a mechanical movement. Any device which changes one form of energy to another is called a *transducer* and the type used in the *Kokusai* mechanical filter is a piece of quartz. We all know that when energised at its resonant frequency, a piece of quartz will vibrate. This mechanical movement is transmitted to the resonant discs by means of a coupling rod. The conversion process at the output is inverted to provide an electrical output. Fig. 5 shows the circuit of a *Kokusai* mechanical filter. You will note that the input impedance at the resonant frequency is high (the actual figures are not quoted; the only reference is that they have less impedance than an IF transformer), while the DC resistance between the input terminals is low, about 1·8 ohms. This means we cannot follow a two-diode shunt-fed balanced modulator directly with the filter firstly because the output impedance of the balanced modulator is low, and secondly (the really prohibitive reason), because the low input resistance of the filter will short circuit the audio.

Fig. 6 shows the arrangement for using this filter in the sideband generator described on p.664 of the January issue of SHORT WAVE MAGAZINE. An alternative method of feeding this filter is to follow the balanced modulator with a valve amplifier and fit the mechanical filter in its anode circuit. Fig. 7 shows the circuit for this arrangement.

[over

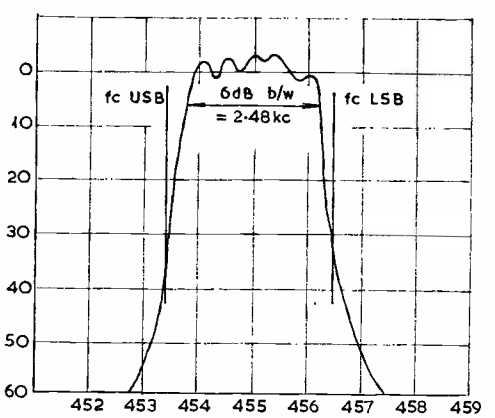

Theoretical sideband attenuation

USB	fm	LSB
45dB	300cps	40dB
55dB	500cps	50·5dB
>60dB	1000cps	>60dB

T 420

Fig. 4. Another very good example of the excellent Sideband attenuation that can be achieved using the Kokusai filters. This is an actual plot taken on a Type MF455-10CK component.

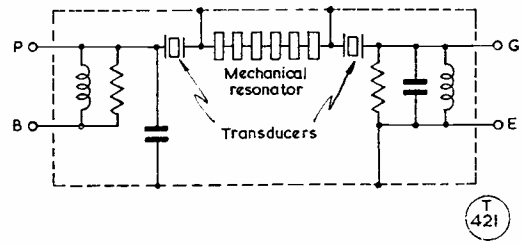

Fig. 5. Diagram to show the general arrangement of the Kokusai range of mechanical filters.

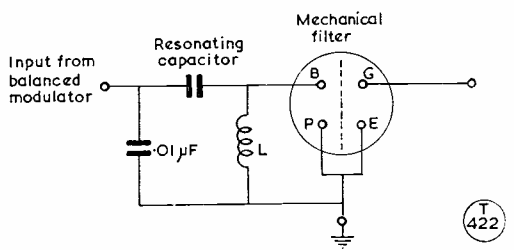

Fig. 6. Showing how a Kokusai mechanical filter can be used to follow a shunt-fed balanced modulator.

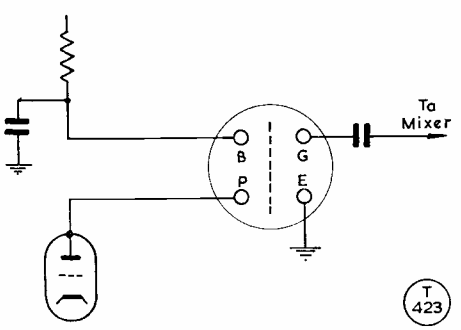

Fig. 7. Another method of using the Kokusai filters in a Sideband transmitter.

An Alternative Design

The other manufacturer of mechanical filters available in this country is *Collins*. The transducer elements are of a different type to those used by *Kokusai*. They rely on a phenomenon called *magnetostriction*, meaning the effect of some magnetic materials have to change length as a result of being placed in a varying magnetic field. This mechanical movement is transmitted to discs, and at the output end the process is reversed to provide an electrical output. Fig. 8 shows the make up of the *Collins* range of mechanical filters.

Many types are available in the *Collins* range. However, one particular type, namely F455-FA-21, has been developed as a low-cost filter specifically for the amateur market. Unfortunately, the writer has not yet had the opportunity of evaluating the performance of this filter, so only some specifications available from the data sheet can be quoted. Table I lays these out (*see* below).

These *Collins* types are a little more expensive than the *Kokusai* range, but it is understood that price reductions are imminent. The size of the *Collins* F455-FA-21 is 2½in. long, slightly more than half-an-inch wide by ½in. high, and it can be plugged into three-pin transistor sockets.

The type of *Collins* filter checked out at G3RNL was the F455-H-31, as shown in Fig. 1. This retails somewhat higher than the amateur filter, at about £21. The specifications quote centre frequency of 455 kc ±0·5; 6 dB bandwidth 3 kc nominal; 60 dB bandwidth 6·5 kc maximum, and a maximum top of the passband ripple of 3 dB. Fig. 9 is an actual plot of the specimen worked over at G3RNL. The only criticism the writer has of this particular filter is that the input and output pins are very close together and therefore screening is a little awkward. This can be overcome though and the filter's small size makes it very attractive.

The smallest and most remarkable filter tested is the *Brush Clevite* ceramic ladder device. Fig. 1 shows its size in comparison to the other two. Various types are made with bandwidths varying from 2 kc to 45 kc with a centre frequency of 455 kc ±1 kc. The particular specimen suitable for use in amateur SSB work is the TL-2D5A, which has a minimum bandwidth at the 6 dB points of 2 kc and a maximum bandwidth at 60 dB of 5·2 kc. The input impedance is 1·5K, the maximum ripple 3 dB, with an insertion loss of 10 dB. Fig. 10 shows the plot of the one used at G3RNL for some time.

The steepness of the sides and hence the theoretical sideband attenuation figures are quite remarkable

TABLE I

Sample of specifications for the Collins Mechanical Filter type F455-FA-21 produced for the amateur market.

Centre Frequency	455 kc nom.
6 dB Bandwidth	2·1 kc nom.
60 dB Bandwidth	5·3 kc max.
Top of passband ripple	3 dB max.
Transfer Z	6·75K ohms ± 2·25K ohms
Resonating Capacity	130 μμF ± 5 μμF
Insertion Loss	9·5 dB
Spurious Response Attenuation (440 kc to 470 kc)	60 dB min.
Signal Input Voltage	0v. to 2v. RMS

Shunt feed is necessary to eliminate DC through transducer coils which would alter filter characteristics.

Fig. 1. Three of the commercial filters discussed in the article.

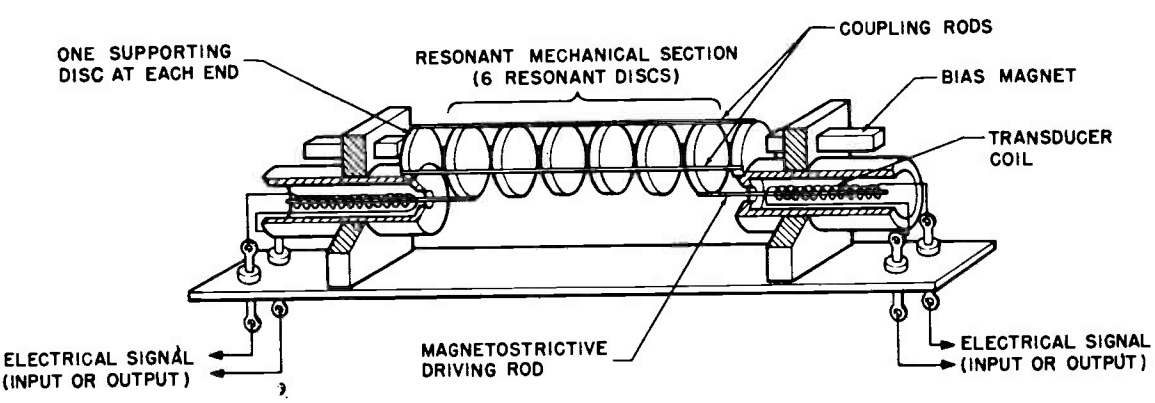

Fig. 8. The physical arrangement of a Collins mechanical filter.

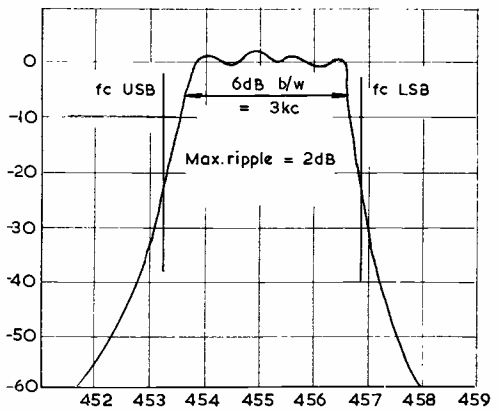

Theoretical sideband attenuation

USB	fm	LSB
27dB	300cps	32dB
38dB	500cps	46dB
51dB	1000cps	60dB

T 424

Fig. 9. The curve and Sideband attenuation figures for a Collins mechanical filter Type F455-H-31. This is as plotted by the author.

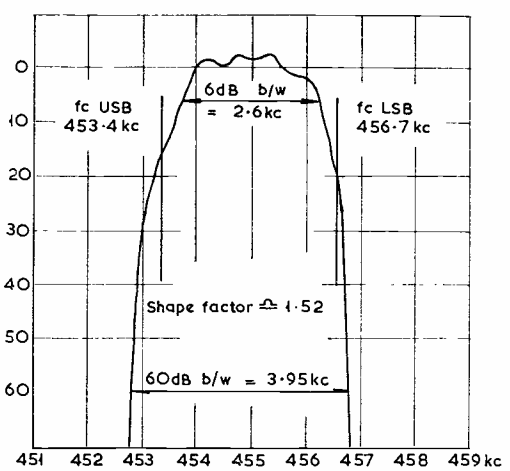

Theoretical sideband attenuation

USB	fm	LSB
14dB	300cps	>>75dB
37dB	500cps	"
>> 75dB	1000cps	"

T 425

Fig. 10. The plotted passband of a Brush Clevite ceramic ladder filter Type TL-2D5A. This is a particularly interesting design of mechanical filter — see text.

for its size. Matching into the circuit was no problem; in fact, the output of the shunt-fed balanced modulator was fed straight into the filter, the output of which went to the grid of the filter amplifier *via* a 500 $\mu\mu$F capacitor.

Thinking About HF Filters

Let us now consider HF filter design. If you remember from the February issue, the design of a crystal filter required that the resonant and anti-resonant frequencies of two crystals had to be juggled about to provide a flat top and steep sides for a filter. It was shown that because the two resonant frequencies were so close together with LF crystals these had to be shunted with an inductor to produce another resonant frequency. With HF filters this is not necessary as the poles and zeros are spaced such that the bandwidth of the filter will be acceptable for SSB use. Fig. 11 shows how a two-section filter is derived. Fig. 11 *(A)* shows a standard half-lattice configuration, while *(B)* shows two sections turned around and cascaded: *(C)* shows two sections again, the first back-to-front while the second section is back-to-back with the first and inductively coupled. This is easily evolved into *(D)* where the coupling inductor L is untuned and centre tapped, its inductance being made so high as to not resonate anywhere near

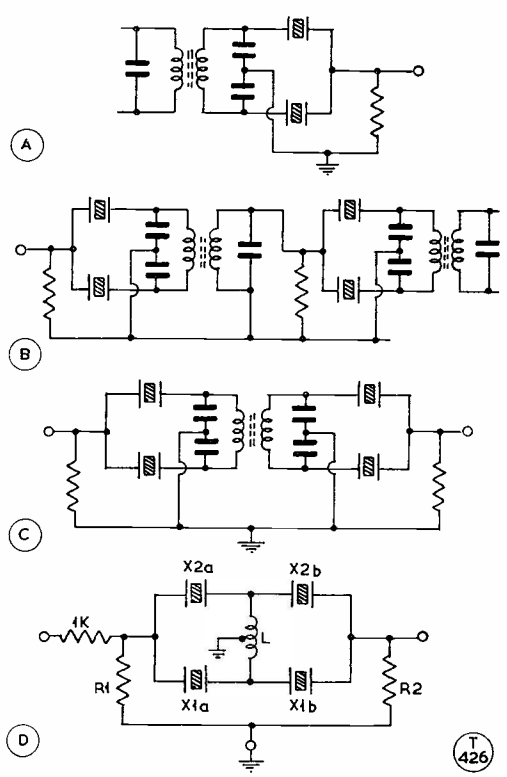

T 426

Fig. 11. The derivation, from (A) to (D), of the most common form of HF crystal filter in use—that is, two half-lattice sections back-to-back, as shown in (D).

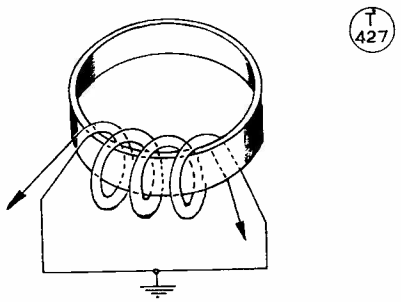

Fig. 12. The method of winding the coil L on a ferrite ring for use in the HF crystal filter shown in Fig. 11 (D).

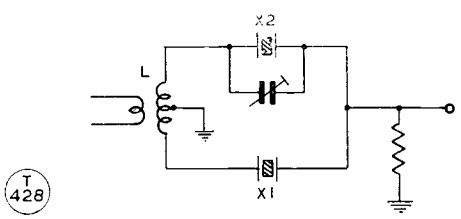

Fig. 13. A half-lattice HF crystal filter. X2 should be about 1.7 kc higher in frequency than X1. Coil L is wound on a ferrite ring as described in the text — and see Fig. 12.

the passband of the filter. The important point about L is that the coupling between sections must be very high. It can be a standard coil wound on a core but an easier method with more consistent results is to use a core of ferrite. A ferrite ring is the most popular choice. The coil should be bifilar wound as shown in Fig. 12. About 30 to 40 turns (60-80 total) is required, but this is not at all critical providing the coil does not resonate near the passband. The pole-zero spacing of the crystals for a bandwidth of 3 kc should be about 1·7 kc. However, the important thing is to get the parallel resonant frequency of the lower crystal to line up with the series resonant frequency of higher one. Exact coincidence will provide a flat top to the passband. Differences of 100 c/s or so will produce a dip in the centre of about 3 dB which is acceptable. The carrier frequency again should be placed 300 c/s beyond the 6 dB point and will come out very close, probably within 100 c/s of the higher frequency filter crystal for LSB and the lower frequency filter crystal for USB.

The great advantage with this type of filter is that once the crystals have been selected no adjustment is needed unless an asymmetric filter is required, when a small capacity should be placed across the higher frequency crystal and adjusted as for the LF filter. The terminating resistors (R1 and R2 in Fig. 11 *D*) are quite important. A nominal value is 5K but could vary and should be selected to provide the best shape to the passband.

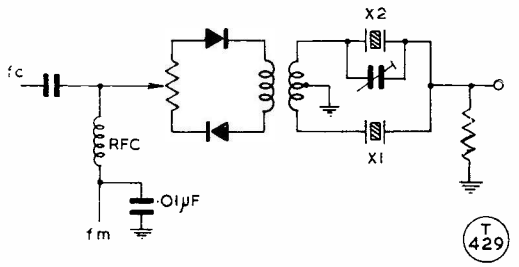

Fig. 14. Method of connecting a half-lattice HF filter to a two-diode balanced modulator.

The filter shown in Fig 11 *(D)* is a suitable configuration for the popular range of HF filters between 8 mc and 9 mc.

For those with really tight purse strings a half-lattice version of this filter is shown in Fig. 13. The secondary of the coil should again be about 30-40 turns bifilar wound, while the primary link winding should be about 5-6 turns. However, as it is it cannot be connected straight into the SSB generator section described on p.664, January, but should be used as shown in Fig. 14. It could be turned back-to-front and thereby present a higher impedance to the audio signal to prevent it being short-circuited to earth.

The same sort of configuration can be used for medium frequency filters of about 5 mc. However, the pole-zero spacing of crystals around this frequency is generally not quite enough to provide a usable bandwidth. The inductor L should be tuned to provide other resonant frequencies of the crystals which will then produce at flat top. Tuning of the inductor should be carried out by placing the tuning C across the outer ends of L.

(To be continued)

HENRY'S RADIO—New Catalogue

A well compiled and illustrated new catalogue, listing no less than 5,000 stock lines, is now available from Henry's Radio, Ltd., 303 Edgware Road, London, W.2. The 1966 edition also includes a separate Hi-Fi section and an enlarged transistor and associated components list, together with a supplement incorporating (from the catalogue) the full range of transistors, valves, crystals, zeners and rectifiers. The catalogue costs 6s. post free to readers, but vouchers to this amount fully offset its cost when a purchase is made. The 16-page supplement is free of charge, and the catalogue itself is also issued free on request to all industrial users, research establishments and wholesale buyers.

"RTTY TOPICS"—Next Appearance, June

Those who follow our regular "RTTY Topics" feature are asked to note that its next appearance will be in the June issue, thus restoring the alternation with "SWL," the regular Listener feature. For various reasons, these two features coincided with the last (March) issue, which made the allocation of space for other technical material rather inconvenient.

experience. A few trials with a transistor known to be good will do more to justify the method than a page of print.

As to the polarity paradox mentioned earlier: Though very obvious when one gives it a little thought, it should be remembered that a normal voltmeter or ammeter has its *plus* and *minus* marked according to the way it is to be connected to the external circuit under test. Hence, when the same instrument is switched to read as an ohmmeter using its internal battery, the polarity of the test voltage is the reverse of the meter markings. *See* Fig. 2. This important fact must be borne in mind when testing transistors.

The junctions of the transistor can be checked independently using the ohmmeter. The positive lead is connected to the base of the *n.p.n.* transistor and the negative side in turn to collector and emitter, to read the forward resistance of the collector and emitter junctions. Repeating the process with reversed polarity of the leads tests the leakage current of the junctions.

Of course, *p.n.p.* transistors can equally well be tested by interchanging *plus* and *minus* throughout the foregoing explanation. To prove the method, carry out some careful tests, just to see what happens. After you have tried it a few times with good transistors, you will find you can do it all quickly and accurately, and that you have a reliable test method—at your fingertips!

DISCUSSING SINGLE SIDEBAND

MIXING TO THE AMATEUR BANDS—MUTING AND NETTING —VFO STABILITY—POINTS ON DRIVERS

Part V

B. A. WATLING (G3RNL)

Previous articles in this series appeared in December, January, February and April issues.—Editor.

IN Sideband systems, mixing processes are quite critical, though the object is simply either to add or subtract two frequencies to produce a third *without spurious responses.* The mixer in order to perform its task must be non-linear which not only means that the two frequencies will mix but also that harmonics will be produced which will also mix. Careful selection of the frequencies is necessary, as is the ratio of signal voltage to oscillator voltage; this is generally at least 10:1, and preferably greater.

Consider first of all the conversion of a 455 kc LSB signal to 80 metres. The VFO must run at either 3955 kc to 4255 kc, or 3045 kc to 3345 kc. It has been mentioned earlier in the series that sideband inversion will occur if the SSB signal is subtracted from the oscillator: this is obvious if one considers that increasing the frequency of the SSB will cause the final frequency to decrease. The convention is that LSB will be used on 80 metres, therefore the oscillator must run 3045 kc to 3345 kc and therefore *add* to the 455 kc LSB signal. This range of frequencies is perilously close to the final output frequency and therefore must be eliminated. Tuned circuits alone, unless of course a number are used of high Q, will not attenuate the VFO signal enough. Thinking back on the discussion of balanced modulators the same problem occurred there in eliminating the carrier. The same solution is the answer, *i.e.*, a balanced modulator, termed a balanced mixer in this application. Diode types could be used but are uncommon because of the high losses involved. It is more usual to find double triode balanced mixers, the simplest of which is shown in Fig. 1. The analysis of this mixer is a little complicated but consider what will appear at the output if only the conversion oscillator input was present. Due to the fact that a phase change occurs between grid and anode and not between grid and cathode or between cathode and anode, both anodes will have the oscillator signal present but of opposite phase and will therefore cancel out. In fact, the degree of suppression that can be effected in practice by this mixer is only about 20 dB, because the oscillator signal at the anode of the first half of the valve will be less than the signal at the anode of the second half. A slightly more elaborate version with improved rejection is shown in Fig. 2. Here some of the oscillator input is taken direct to the cathode to ensure more oscillator voltage at the anode of the first half of the valve.

These two circuits are useful because of their simplicity and they require no adjustment. They are only permissible when the oscillator is not too close to the final output frequency. In the example earlier of converting 455 kc to 80 metres a mixer with better rejection capabilities is needed. The circuit of Fig. 3 provides the necessary rejection. The anode of the second half of the valve has the most oscillator signal on it and is capacity coupled to the first anode by VC1. This is adjusted until the two out-of-phase signals at the first anode are of the same amplitude and therefore cancel. An improved type with more conversion gain is shown in Fig. 4. RV1 is the balance control and should be adjusted for minimum oscillator signal at the output. Slightly more oscillator attenuation can be achieved by replacing the tuning capacitor on the primary of T2 by a differential capacitor and should be adjusted after RV1 to improve the null. This refinement however is not at all essential and is generally dispensed with. T1 in Fig. 4 is the 455 kc IF transformer in the anode of the filter amplifier of the fixed frequency sideband generator described

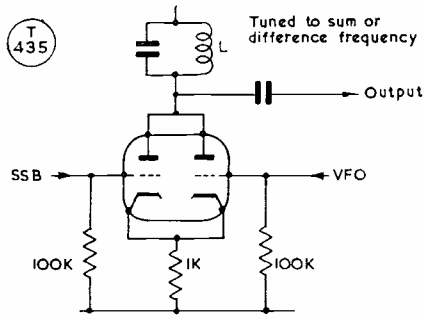

Fig. 1

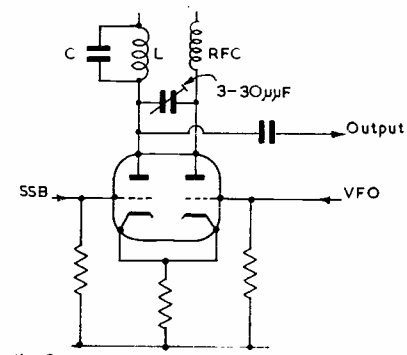

Fig. 3

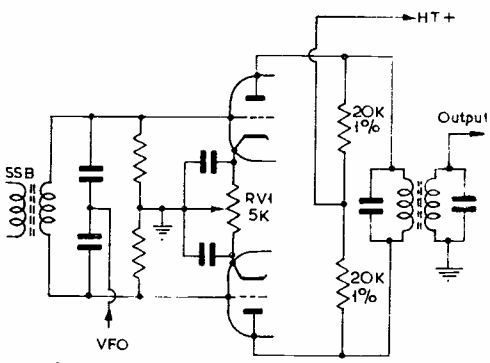

Fig. 4

Fig. 1. Simplest form of balanced mixer, providing some degree of conversion oscillator attenuation at the output. Fig. 3. Balanced mixer with much higher oscillator rejection capability. Fig. 4. A push-pull type of double-triode balanced mixer.

in the January issue, p.664.

If the sideband generator is an HF type, *e.g.*, 9 mc, then either of the mixers shown in Figs. 1 and 2 will suffice. The sideband signal output, if mixing 9 mc with a VFO running 5 mc to 5·5 mc, will be the same sideband as the 9 mc signal. Sideband switching must therefore be performed at the beginning, *i.e.*, by switching the carrier oscillator

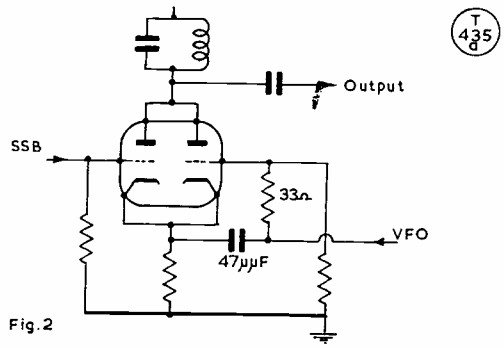

Fig. 2

Fig. 2. A balanced mixer with slightly improved oscillator rejection compared with the circuit of Fig. 1.

from one side of the filter passband to the other.

The output from this mixer must be amplified to provide enough output to drive a PA stage. A single EF80 will give sufficient gain and output voltage swing to drive any PA in Class-AB1. Fig. 5 shows the circuit diagram of a mixer/amplifier section designed to follow a 455 kc fixed frequency sideband generator section as described in the January issue. By the suitable selection of T1, L1 and VFO frequency, this may be used for 80 metres or 160 metres.

Muting and Netting

Transmitter muting on standby is achieved by cutting off the mixer with a negative voltage *via* RV2, which also provides the negative voltage required for the PA. Netting is achieved by taking the mixer grids to earth *via* SW1 but leaving the PA cut off. The mixer (V1) and driver (V2) tuning is carried out by VC1 and VC2 which could be ganged to the VFO tuning. The VFO can be built on a sub-chassis to mount at the rear of Chassis 2 if required. A VFO circuit suitable for use with the circuit of Fig. 5 is shown in Fig. 6. (*See* p.146.)

Of course many various types of VFO configuration are possible. However, the Colpitts circuit shown is very reliable and stable. Best stability is achieved by keeping the frequency-determining components away from all heat sources and preferably in a separate screened box, as indicated in the circuit, connected to the valve electrodes by lengths of coax.

Two-band operation on 160 metres and 80 metres could be achieved by switching the tuning inductors in the anode circuits of the mixer and driver and by switching the VFO. This can be achieved by two methods, as indicated in Fig. 7, the method in *(b)* being probably the best.

VFO Stability

As previously mentioned stability of the VFO is very important. The main cause of drift in VFO's

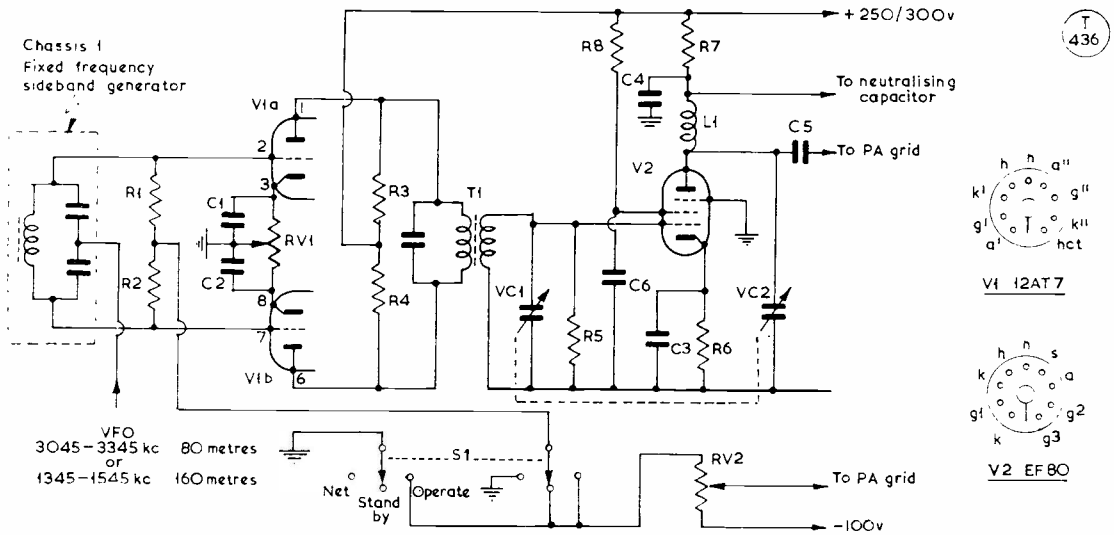

Fig. 5. Circuit of a mixer-amplifier section suitable for converting a 455 kc lower SB signal to the 80 or 160m. bands. Coil L1 can be as required, wound on a miniature slugged former. T1 is also selected to tune the required band.

Table of Values

Fig. 5. Circuit of a Mixer/Amplifier

C1, C2, C3, C6	= ·01 μF	R7	= 1,000 ohms
C4	= ·001 μF	R8	= 4,700 ohms
C6	= 150 μμF	RV1	= 5,000-ohm carbon potentiometer
VC1, VC2	= 100 μμF	RV2	= 10,000-ohm w/ wound potentiometer
R1, R2	= 100,000 ohms	T1, L1	= To tune 80/160m.
R3, R4	= 20,000 ohms, 1%	V1	= 12AT7
R5	= 27,000 ohms	V2	= EF80
R6	= 100 ohms		

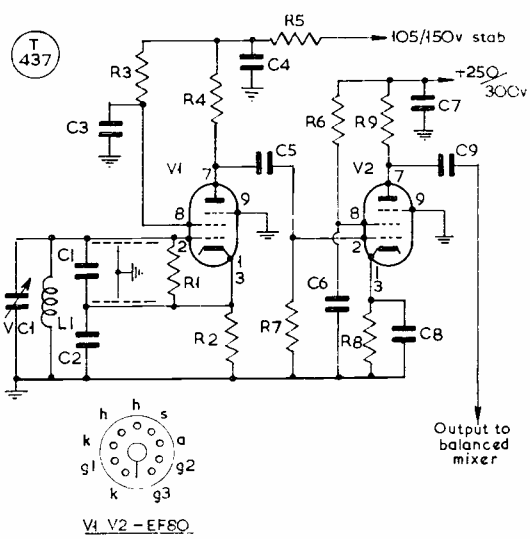

Fig. 6. A VFO circuit suitable for the mixer-amplifier shown in Fig. 5 — see text.

is the changing characteristics of the components used in the frequency-determining section. All capacitors used should be NPO (zero temperature characteristics). The inductor, which can change its characteristics when warmed up, should preferably be tension wound on a ceramic former. The tuning condenser should be of high quality, preferably with ceramic end plates. These are what should be aimed for. You may, with careful design, get away with a little less but only a little, and of course capacitors with the required temperature characteristics can be added to counteract some thermal drift. Don't think these will cure *all* drift problems, though; some can be caused by poor components changing their characteristics due to high RF currents. Careful design both electrically and mechanically is essential if a lot of frustration is to be avoided.

Before venturing on the air with a new rig it should be checked for stability. First switch on the heaters to the VFO and then, 30 seconds later, apply HT. Measure the frequency and after, say, 30 minutes check again. Not more than 500 c.p.s. to 600 c.p.s. drift should be aimed for; obviously, the quicker it reaches its stable frequency the better. After the initial warm-up period the drift then should not exceed 100 c.p.s. in any 30-minute period

Table of Values

Fig. 6. VFO circuit for Fig. 5

C1, C2	= .001 μF, s/m NPO	R1, R4, R7, R9	= 27,000 ohms
C3, C4, C6, C7, C8	= ·01 μF	R2, R8	= 1,000 ohms
C5, C9	= 150 μμF	R3, R6	= 100,000 ohms
VC1	= 250 μμF	R5	= 10,000 ohms
		V1, V2	= EF80

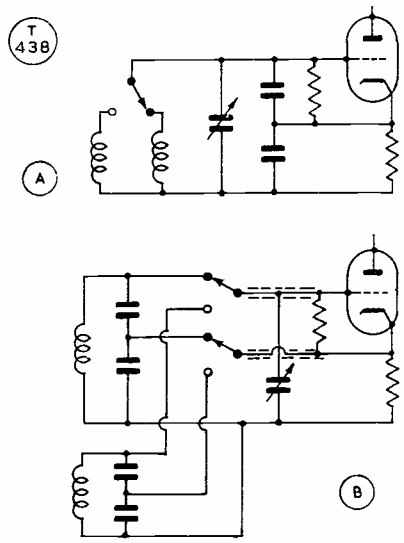

Fig. 7. Two methods of VFO switching. (A) is the simpler, but (B) is probably a better approach.

and should be far less. Mechanical stability also should be checked. It's no good having excellent electrical stability if when you write out your log on commencing a QSO the vibration of the operating table causes the VFO to change frequency! A test demonstrated on the air by a station using a commercial transceiver was to raise the front of the rig about one inch off the bench and drop it while carrying out a commentary of his efforts over the air. A loud thump was heard and although the voice changed pitch it was so slight that it was not necessary to re-tune at all. In fact, the frequency shift was estimated at somewhat less than 20 c.p.s. It can be done!

The R.C.A. 7360

Before leaving the subject of balanced mixers an interesting and very efficient type uses a 7360 beam deflection valve. The circuit, shown in Fig. 8, provides more than adequate conversion oscillator attenuation and more conversion gain than those previously described. These particular valves (7360) have not, as yet, been evaluated at G3RNL. The information here is given as a result of reports and discussions with people who know them.

[*over*

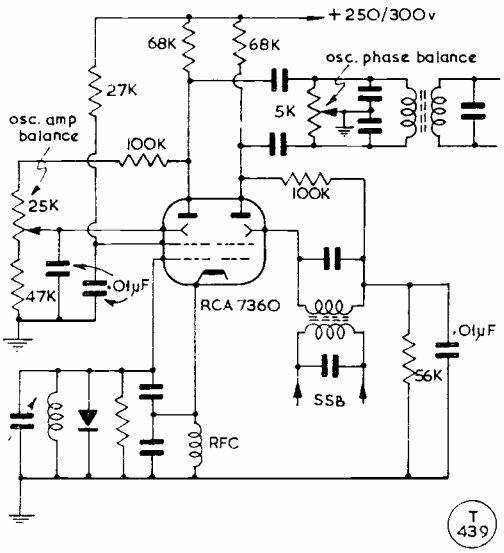

Fig. 8. The R.C.A. 7360 beam deflection valve as a self-excited balanced mixer. Though it is not evaluated in this series, the 7360 is widely used in commercial designs.

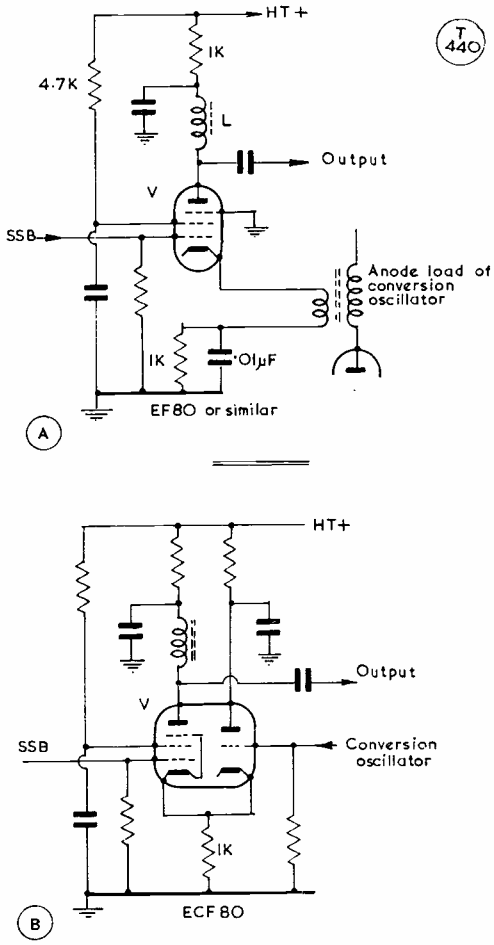

Fig. 9. Two ways of mixing (A) and (B), where the frequency separation is such as not to warrant the use of a balanced mixer — see text.

HF Conversion

So much for single conversion rigs. In order to get on to the HF bands a further conversion must take place. With this second conversion automatic sideband selection can be effected by choosing the frequency of the conversion crystal oscillator so as to subtract the original sideband signal from it to obtain sideband reversal, or to add the original sideband signal and therefore maintain the same sideband. The type of mixer used for this conversion need not be a balanced type if mixing from 80 metres. Various types are in use, two of which are shown in Fig. 9. These mixers act as Class-A amplifiers when there is no conversion oscillator input and can therefore be used to amplify the 80-metre signal. When a conversion oscillator signal is applied the valve is driven into the non-linear region and therefore mixes.

Of course various other forms of mixer can be

Table of Values

Fig. 10. Mixer/Amplifier 10-80 Metres

C1, C2, C3, C4, C5, C6, C8, C9, C11, C14, C15	= ·01 μF disc cer.
C7, C16	= 100 μμF, s/m
C10	= 500 μμF
C12	= 22 μμF, s/m
C13	= 250 μμF, s/m
VC1	= 100 μμF
VC2/VC6	= To tune L3 to xtal freq.
R1, R2, R8, R15	= 100,000 ohms
R3, R4	= 20,000 ohms, 1%
R5, R11, R14	= 27,000 ohms
R6, R7, R16, R17	= 1,000 ohms
R9	= 10,000 ohms
R10	= 4,700 ohms
R12	= 100 ohms
T1	= To tune 3·5 to 4·0 mc (WBC)
L1, L2	= To tune amateur bands
L3	= To tune highest xtal freq.
V1	= 12AT7
V2	= ECF80
V3, V4	= EF80

Crystal Frequencies: X1, 40m., 3·3 mc; X2, 20m., 18 mc (or 2/9 mc); X3, 15m., 25 mc (or 2/12·25 mc); X4, 10m., (28-28·5 mc), 32 mc (or 4/8 mc); X5, 10m., (28·5-29 mc), 32·5 mc; X6, 10m. (29-29·5 mc), 33 mc.

Note: L3 is to tune highest crystal frequency with no external capacity. For more drive on HF bands, V3 can be a 6BW7.

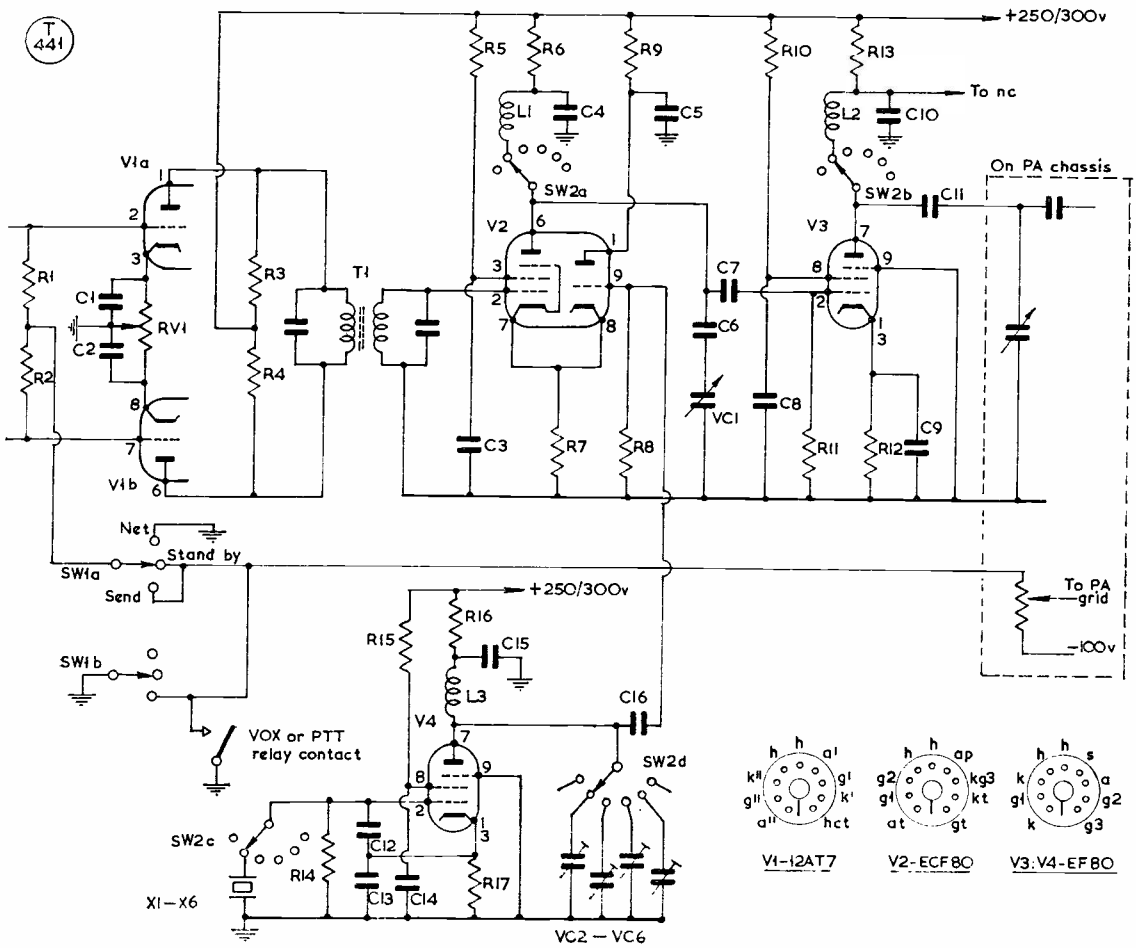

Fig. 10. Suggested mixer-amplifier arrangement for complete 10-80m. coverage, to follow a 455 kc Sideband generator. A suitable layout is shown in Fig. 11 and a VFO in Fig. 6. If lack of drive is experienced on the HF bands, V3 can be changed for a 6BW7, but care must be taken to avoid instability.

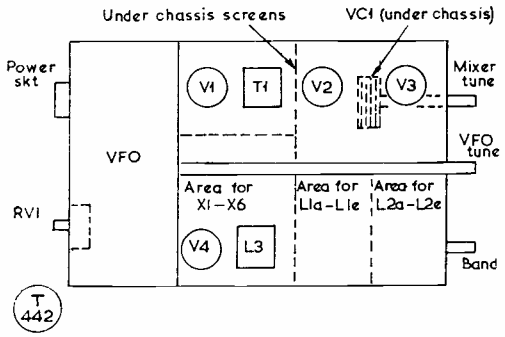

Fig. 11. A suggested layout for the circuit of Fig. 10, where it is essential to provide good separation in the interests of stability.

utilized for the second conversion, such as the type used in a receiver's frequency changer stage, but those shown in Fig. 9 produce a good output and should be followed by a Class-A amplifier and then into a PA in AB1. A design for an exciter to cover 80 to 10 metres from an original 455 kc sideband signal is shown in Fig. 10, together with a suggested layout in Fig. 11.

Instability Problems

One of the biggest causes of frustration and disgust when building a Sideband rig is the problem of getting enough drive without having the amplifier stages taking off. The driver is the big problem, particularly when using a high-slope valve such as a 6CL6. Trouble has also been experienced with the filter amplifier when using a home-built filter finishing up with an IF transformer. This instability is not always immediately apparent to the operator of the offending rig because on steady carrier, when tuning up, and on zero carrier, all seems well. The fault can, and has done in one of the writer's rigs, manifested itself only when the signal is applied to the stage at syllabic rate, *i.e.* when modulating. The receiving station thinks you're mad while adjacent stations think you're an idot putting out such a signal.

How can one overcome this problem ? A lot of people have asked that question, and one is sure also that some have given up in disgust. Instability is caused by some form of positive feedback. The most common cause of this is due to stray RF fields being radiated from wires connecting the valve to band-change switches and coils. It's more common in driver stages because the output, hence the radiated field, is that much stronger. It is therefore important to pay particular attention to the positioning of components and to screen the input and output leads to a stage particularly if, as in the case of a driver or filter amplifier, the input and output tuned circuits are resonant at the same frequency. In addition adequate decoupling must be achieved. In really stubborn cases grid and anode stoppers can be tried.

In some cases the instability may be caused by internal positive feedback due to the inter-electrode capacitance between grid and anode. To overcome

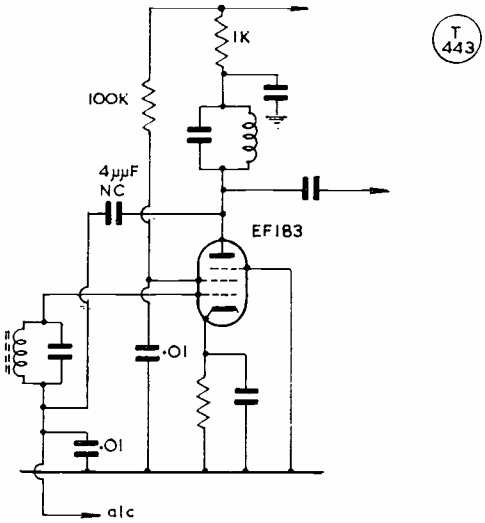

Fig. 12 : Method of neutralising a filter amplifier

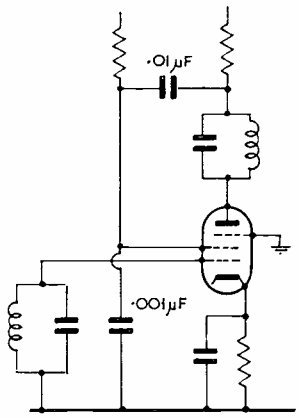

Fig. 13 : Screen grid neutralisation of a Class-A amplifier

this, feedback of the opposite phase must be applied. The easiest method of providing negative feedback, which obviously reduces the stage gain, is to remove the cathode decoupling capacitor. If this doesn't cure it then your instability is most certainly still due to external feedback. An alternative to this, and a method that can be adjusted so that the loss of stage gain is an absolute minimum, is to neutralise the offending stage. In the case of low-level stages such as a filter amplifier, this need only be a small capacitor of a few μμF connected between the anode and the cold end of the preceding coil. Fig. 12 shows the method used at G3RNL to tame an EF183 with a form of AGC, or ALC (automatic level control) as it is termed in transmitter circuits, applied to it. For really troublesome stages the neutralising capacitor NC can be made variable and should be adjusted

for minimum output from the stage with the anode and screen volts removed. Screen grid neutralisation is another form, an example of which is shown in Fig. 13. It must be pointed out here that neutralisation should only be used if all else fails. Careful design of the rig should prevent the necessity for this.

Finally, before going on next time to PA stages, it is important in the interest of minimum distortion to run the driver into a constant load impedance. As the gain of a stage depends upon the load resistance presented to its anode, if the following PA was in Class-AB2 or Class-B, then during some of its input cycle grid current flows requiring driving power, while the remaining part of the cycle requires no driving power. This varying load that the driver sees causes its gain to change and hence distortion products will occur due to the non-linearity. This can be overcome either by using a PA in Class-AB1, where no grid current is drawn at all, or by having a swamping resistor such that the varying load presented by the PA causes only a small variation in the required driving power. This does mean that the exciter must be capable of delivering quite a few watts of output power. Those exciters described in this month's article have, however, been designed only for a Class-AB1 PA. Some power output is available but it is always nice to have output in hand rather than barely enough. For local contacts the exciter alone could be used, the aerial being fed by a link winding on the driver tank coil.

(To be continued)

Editorial Note: For the information of correspondents, our contributor's address as given in the current U.K. *Call Book* is not correct. However, he is QTHR in the Winter Edn. of the *Radio Amateur Call Book* issued by us, and as in "New QTH's," p.558, November. He can also be reached c/o The Editor, SHORT WAVE MAGAZINE, BUCKINGHAM.

PORTABLE IN FLORIDA

WITH A RECIPROCAL LICENCE

C. R. TEMPLER (G3RDX/W4)

HAVING been asked to stay with a war-time friend in Florida U.S.A., my XYL and I decided on hiring a motor caravan (" rent a camper "), thereby to see something of the State.

Luckily the Reciprocity Agreement with America was signed in November and I at once sent in an application (Form 610A) to operate over there to the Federal Communications Board in Washington with a photostat copy of my G licence (all four double-sided sheets of it!). An application for a U.S.A. *visa* came back from their London Embassy in two days and that information too went on to Washington, with Form 610A.

With some help from A.R.R.L., who were most co-operative, I was granted a licence to operate as G3RDX/Portable/W4 from February 7 to July 30, 1966, and we were all set to go.

For some months I had been working Florida stations on 20m. SSB and had made a number of friends on the air, all of whom proved most helpful and generous. On arrival in Orlando on February 15, W4YJQ produced a Heathkit 80-metre transceiver with a Bandspanner antenna which K4GA helped to fit on the camper and I made my first QSO with W4BKC, the local representative of *Florida Skip,* the State Amateur Radio magazine.

Our tour started down the west coast, where we stopped at various State Parks and Static Caravan sites. There are many of the latter in each city, well provided with all facilities and mains electric outlets.

Florida is completely flat and conditions on 80 metres are excellent. They use 3·8-4·0 mc for SSB and, as in this country, there are a number of skeds going daily, some of which provide phone-patch facilities for other amateurs in other parts of the U.S. One difference noticed from the U.K. was the shortness of the " overs "; the continuous wise-cracking was most amusing and there were no long technical discussions! I had thought that being probably the first G to operate in the U.S.A., a call like " G3RDX/Portable/W4 " might produce some excitement on the band, but they accepted it almost without comment!

The Orlando Amateur Radio Club put on an excellent dinner meeting for us and I had to answer

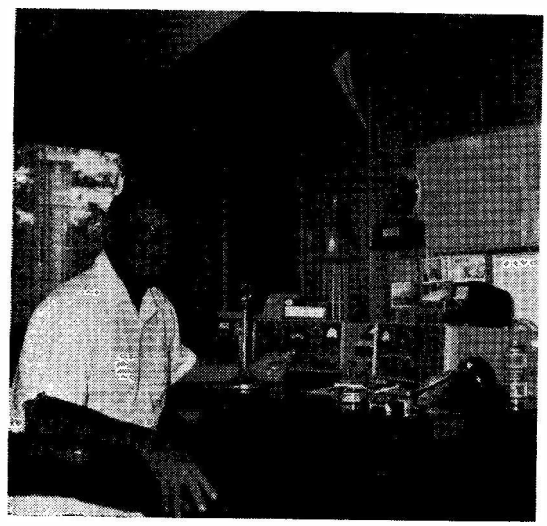

Station of Larry Hull, W4WSM, at 11850 S.W. 69th Avenue, Miami, Fla., first met over the air by G3RDX on 20m. SB, and then in person when he went out there on his safari, as G3RDX/P/W4.

DISCUSSING SINGLE SIDEBAND

POWER AMPLIFIERS FOR SIDEBAND WORKING — THE LAFAYETTE MECHANICAL FILTER

Part VI

B. A. WATLING (G3RNL)

POWER Amplifiers are the root of many troubles with SSB rigs. Incorrect tuning, and the feeding into a reactive load are some of the causes of an almost unintelligible signal. Overdriving the PA causes many a heated moment to adjoining QSO's. One of the main reasons for going on to SSB is to decrease the bandwidth of the transmitted signal, thereby making room for everybody. This is no good whatsoever if the transmitted signal is broadened by bad usage of the PA. All the trouble or expense over a filter to eliminate the unwanted sideband can be wasted if the PA is not truly linear. It can cause signals to appear in the unwanted sideband region. Let's take an example: Assume a signal with a carrier at 3500 kc and sideband stretching to 3503 kc. If two tones, one at 1 kc and the other at 2 kc are fed into the microphone socket, the transmitter output should be 3501 kc and 3502 kc. That will be so if the PA (and, of course, all previous amplifying stages) are perfectly linear. Assume that only those two frequencies are appearing at the grid of the PA but the PA is being driven beyond its normal operating level and therefore into non-linearity. As soon as this happens the stage will act as a mixer. The two frequencies will add and subtract as well as their harmonics. Some of these will fall close to the required output frequencies and therefore "splatter" will result. Let's consider some of these new frequencies produced. The second harmonic of 3502 kc when subtracted from the third harmonic of 3501 kc gives 3499 kc. The third harmonic of 3502 kc when subtracted from the fourth harmonic of 3501 kc produces 3498 kc. These two frequencies (3499 kc and 3498 kc) are right where the *unwanted* sideband would have been had you not taken all that time and trouble to suppress it! This effect is termed Intermodulation Distortion and is similar to Cross Modulation applied to non-linear receiver front ends.

Check Procedures

When using linears the most satisfactory method of checking whether you are overdriving is with a 'scope by viewing the output waveform and advancing the Tx audio gain to the point just before the peaks flatten. The unfortunate thing about sideband is that the full scale deflection of the anode current meter is a little over the peak current drawn by the PA. The psychological effect on the operator is for him, when modulating, to kick the meter up as much as possible. Those with 'scopes will see that if you talk the PA up until the peaks just begin to flatten, the anode current meter will be registering about half the peak current. One says "about half" because it will vary depending on the class of operation the PA is operating in and also the time constant (response) of the meter.

Let's take an example. The most popular valve for low power PA's is probably the 6146. This valve has been designed specifically for operation in Class-AB1. This means that it requires no driving power except that needed to overcome circuit losses. The makers state that the zero signal anode current should be 12 mA if the anode voltage is 750v. and that the maximum signal anode current should be 110 mA. The p.e.p. input is the maximum signal anode current multiplied by the anode voltage, *i.e.* 110 mA x 750v. = 82·5 watts. With an AB1 PA the maximum signal anode current quoted coincides with the point when the control grid begins to draw current. When the PA is correctly loaded any further increase in grid current should not cause the anode current to increase, except for perhaps one or two milliamps. If it does increase then there is something wrong with the load the PA sees. It could be the aerial reactive or it could be the PA tank components.

On speech the audio gain should be advanced until the grid current meter just, and only just, lifts off its stop. This indicates that the PA is being driven to maximum on peaks. The anode current will be averaging about 30 mA and peaking to approximately 55 mA to 60 mA. Advancing the audio gain will certainly produce more average DC input and more apparent output but the peak output will not increase; only the splatter! The only possible way of increasing the average anode current without overdriving the PA is to use some form of compression. The problem that arises here is the over-

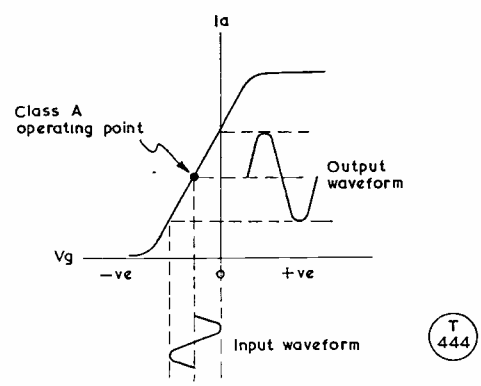

Fig. 1. Anode current, Ia, plotted against grid voltage, Vg, showing the Class-A operating point—this is situated at the centre of that portion of the curve which is near-enough a straight line, extending to the point where the grid voltage is zero.

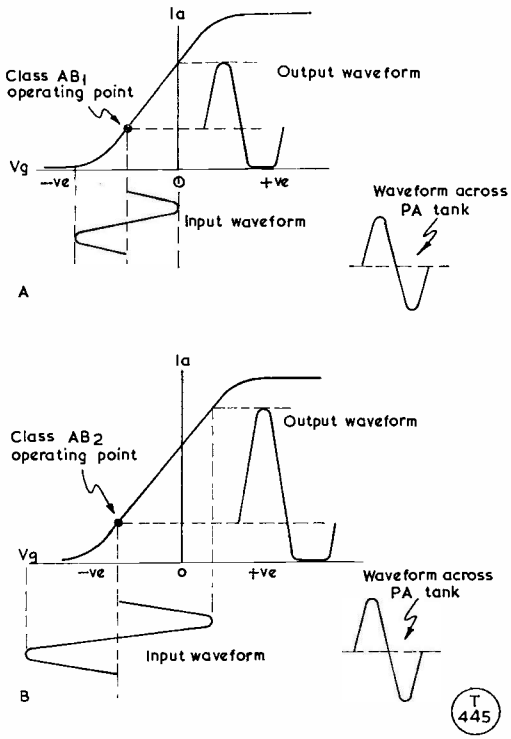

Fig. 2. Ia/Vg curves to show typical operating conditions for Class-AB1 and Class-AB2—notice that in AB2 the grid is driven positive, hence grid current will flow.

running of the PA. The peak input is well beyond the continuous rating of the valve. The reason that it can run like this is because the valve is driven at syllabic rate and therefore its average input does not exceed the rating. Too much compression therefore could mean a substantial decrease in the valve life.

A rough guide then for those without an oscilloscope is to determine the maximum signal anode current of the particular PA you are using and then talk the anode current up to only *half* that value on peaks. Please don't shout when you're calling DX. (The choice piece 5 or 6 kc away will be missed by somebody else !)

In order to decide which PA will suit your particular purpose it is necessary to understand the classes of operation and what they have to offer. Fig. 1 shows a typical curve of anode current plotted against grid voltage. A portion of this curve is approximately linear. If the valve is biased such that the standing anode current is in the centre of that straight line portion then the valve is said to be in Class-A. The required bias can be achieved either by applying a negative standing voltage to the grid or, more usually for Class-A stages, to use automatic bias by inserting between cathode and earth a resistor which will raise the cathode voltage so that the grid is negative with respect to it by the required amount. Applying a signal now to the grid will either aid or oppose the bias on alternate half cycles and therefore vary the anode current. The output waveform will be an exact replica of the input.

The Class-A amplifier requires no driving power because the grid is never driven positive and hence no grid current is drawn. The disadvantage is that the theoretical efficiency is only about 50 per cent but in practice it's more like 25 per cent.

If we were designing an audio output stage the answer would be to use two valves in push-pull, each being biased such that it only amplifies one half cycle. This could be done with RF but it's cumbersome. The advantage we have is in using a tuned circuit at the output. This has a sort of flywheel action in that if, say, one cycle of a *sine* wave is applied to a tuned circuit, providing the tuned circuit is of high enough Q, the oscillation will be sustained after the signal has been removed. The higher the Q (*i.e.*, the lower the loss) the longer will these oscillations remain. Using this effect for linear amplifiers we must put into the tuned circuit at least half of a cycle to "tell" it exactly what shape of signal we want out.

Class-AB1 and AB2

The next category of PA operation is AB. This means that anode current will flow for just more than a half cycle. There are two types of AB operation; Class-AB1 indicates that grid current *does not* flow during any part of the input cycle and Class-AB2 means that grid current *does* flow for some of the time. Fig. 2 shows the Ia/Vg curve indicating the operating points for these classes.

With the majority of valves up to 25 per cent more output can be obtained by running them in class AB2 but there is a disadvantage. Because grid current is drawn during part of the input cycle this means that the stage requires driving power. In addition the load presented to the previous stages varies,

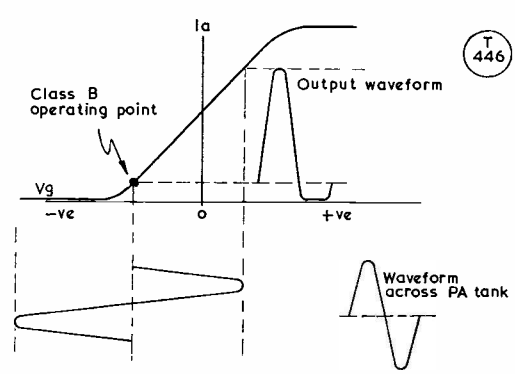

Fig. 3. Ia/Vg curve showing operating conditions in Class-B—the valve is driven well into the grid current region, hence high drive power is required. But efficiency approaches 70 per cent.

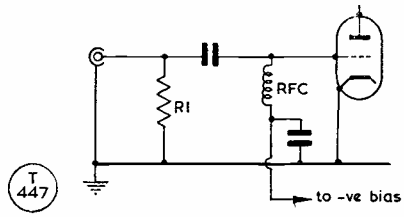

Fig. 4. Circuit for a grid driven linear amplifier using the "passive grid" arrangement.

which again could cause non-linearity there. Certain valves, the 6146 being the most common, have been designed specifically for Class-AB1 working. Very little extra output can be realised by driving them into the grid current region. The advantages with AB1 operation is then that no driving power is necessary, therefore a small driver valve, such as an EF80, is all that is required. The efficiency one can realise in practice with an AB1 stage is about 50 per cent. It varies with the type of valve used. A separate negative bias supply is needed which complicates matters; however it need only be a low current rating supply and it can also be used for transmitter (and receiver) muting.

Finally, Class-B operation. This is the most efficient we can use; the figure approaches 70 per cent in practice. With no input the valve is biased such that the anode current is almost zero—Fig. 3 illustrates. Grid current will be high and will flow for an appreciable portion of the input cycle hence the driving power required is high. Class-B is generally used for high power linear amplifiers following exciters with an AB1 PA capable of delivering about 50 watts or so.

After deciding on the class of operation best suited to your needs, it is next necessary to decide upon the configuration of the PA, either grid driven or cathode driven. PA's in Class-AB1 or AB2 are generally grid driven, while Class-B operation is more commonly found as a cathode driven amplifier. The cathode driven or grounded grid amplifier requires more driving power than the grid driven version but it has the advantage that some of the driving power is fed straight through and appears at the output along with the amplified signal. In fact almost all of the extra power required to drive the grounded grid amplifier appears at the output, so little is lost. This is no consolation if the drive available is low. However, if the exciter has say one or two 6146's in the final then grounded grid offers most advantages—one of these being that the input impedance is low and therefore the exciter will feed straight in, no matching being required. By careful choice of valves, Class-B operation with zero bias can be utilised. This means no negative supply is required and no stabilised screen voltage is needed (this is earthed along with the grid); nor is neutralising required. These advantages mean that a compact high power linear can be constructed at little cost.

Driving A Linear

Feeding a grid-driven linear from an existing exciter with a 75 ohm or 50-ohm output is a little awkward. If the drive from the exciter is limited then the only way of doing it is to feed into a link winding of a tuned circuit in the grid of the PA. This is not too disadvantageous for a single-band amplifier but for multiband work the bandswitching becomes cumbersome. Where adequate power is available a "passive grid" circuit can be employed, *i.e.* a resistor placed in the grid circuit instead of a tuned circuit, as shown in Fig. 4 R1 in this circuit should be non-inductive and ideally should have a resistance to match the output of the exciter, *e.g.* 75 ohms or 50 ohms. The difficulty here is that grid driven valves require a fairly large voltage swing on the input. Let's assume that 50 volts is required. Then the power necessary to produce this voltage across a 50-ohm resistor is 50 watts. Added to this of course is the power required to drive the PA, which means two 6146's are required. However, providing the connecting coax between exciter and

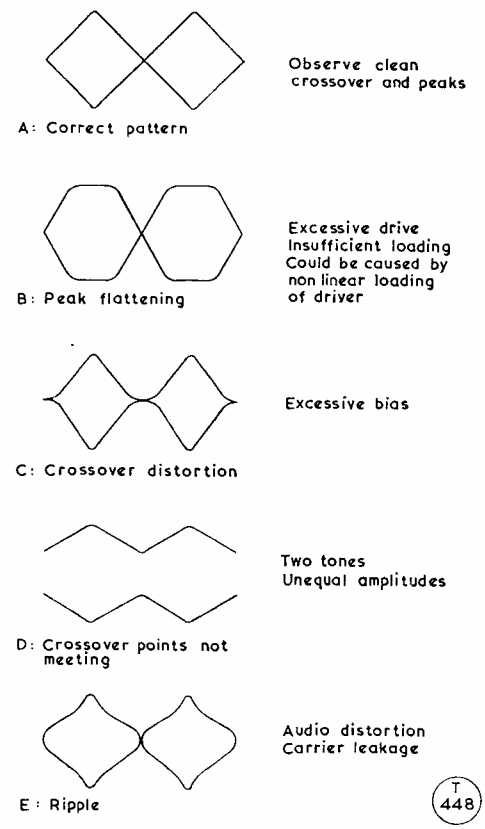

Fig. 5. The oscilloscope trace to be expected when using the two-tone test.

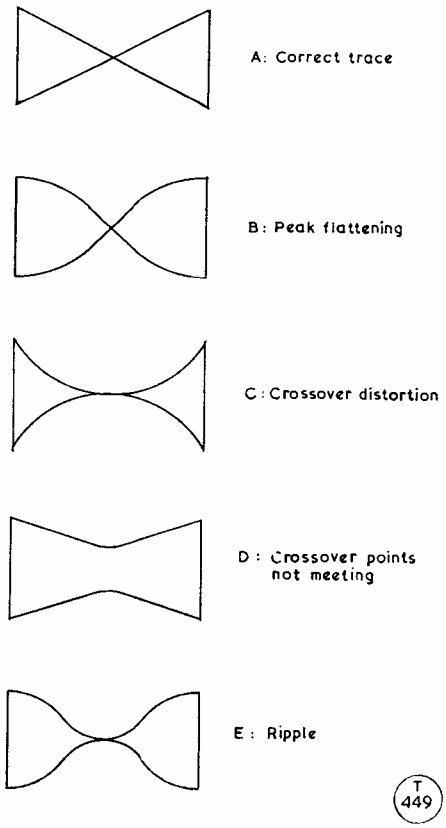

Fig. 6. When using the trapezoidal display, these are the traces to be expected when using two-tone for testing.

linear is short then R1 can be increased to 100 ohms and perhaps a little higher; 100 ohms in the grid of a PA requiring 50 volts to drive it mean 25 watts *plus* the power required to drive the stage. A single 6146 can handle this comfortably. What a waste, though! 25 watts of useful power being dissipated in a resistor which does nothing but warm up the shack (or the components under the chassis hence reducing their life). The choice is yours, which may well be dictated by the valves available.

Oscilloscope Checks

Once you have decided upon and built a PA it is necessary to evaluate its performance. Efficiency can easily be checked by measuring the power output with a dummy load and an RF ammeter. The most important thing you want to know is whether or not the PA is linear. This is where the magical "two-tone test" rears its head. Linearity of the PA cannot be checked with a single tone or single frequency into it. No matter how many harmonics of that frequency are present they will be so far removed from the output frequency that they will not show up on the 'scope. (They may show up on your neighbour's TV Rx but this sort of test is not recommended.) At least two frequencies must be applied to the PA in order to determine whether these are mixing. The two frequencies must be *sine* waves of equal amplitude separated by about 1 kc and not harmonically related. They can be derived either by using an audio oscillator producing these two frequencies fed into the microphone socket, or an audio oscillator producing one *sine* wave while the second frequency is supplied by inserting carrier. Care must be taken in setting these up. They *must* be sine waves and they *must* be of equal amplitude. The output of the Tx should be connected to the vertical plates of an oscilloscope, a convenient method being by means of a low capacity probe across the dummy load. Fig. 5 shows the traces that you should and shouldn't get.

This method of viewing the output of the linear has disadvantages in that it becomes difficult to see small non-linearities; a straight line indication would be more useful. A method used to monitor AM transmissions in the trapezoidal display. This also can be used for SSB by connecting the exciter audio to the horizontal deflection plates and the RF to the vertical plates. The display will then be a double trapezoid. Fig. 6 shows typical traces. This method can be permanently left in and will provide a useful monitor on voice modulation. A further method, considered by the writer to be most useful, uses two envelope detectors, one at the input and one at the output of the amplifier under test, as shown in figure 7. The amplifier input detector is fed to the horizontal plates of the scope while the output detector is taken to the vertical plates. The resultant trace will (or should, if the PA is linear) be a straight line. Fig. 8 shows typical traces.

PSU Considerations

Before going on next month to actual designs of linear amplifiers it is as well to consider the requirements of a power supply unit. The anode supply has to provide a varying current to the PA. Non-linearity will occur if this voltage varies when modulating. Large smoothing capacitors are there-

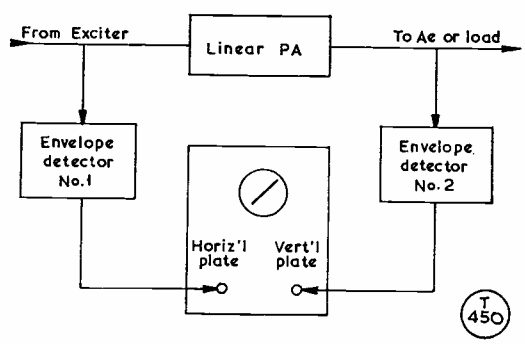

Fig. 7. The set-up to obtain straight-line linearity traces when checking on an SSB rig.

fore necessary, generally in the order of 100 μF.

The screen grid potential is very critical. Variation of this again can cause distortion products to occur. Stabilised supplies are therefore necessary. Grid bias supplies should also be "stiff." Variation of this changes the operating point and hence distortion can occur. Transformer ratings should be worked out on average current drawn by the PA. This means that a PA drawing say 110 mA on maximum signal needs a transformer rated only at about 60 mA.

(To be concluded)

THE LAFAYETTE MECHANICAL FILTER

(Obtainable from G. W. Smith & Co. (Radio) Ltd.

RECENTLY a *Lafayette* mechanical filter came to hand and the following is an assessment made under the same conditions as for the other mechanical filters described in Part 4 (April, 1966) of this series.

This filter, type MF-455-10AZ27, comprises a mechanical filter and associated input and output matching transformers, all mounted on a printed circuit board measuring 2¼in. by 1⅝in. The matching RF transformers are only ⅜in. square by 7/16in. high. while the mechanical filter itself is 1¼in. long by 19/32in. square. A lot of space on the printed board is therefore unused, which may be thought to defeat the advantage of such a small filter.

Table 1 gives an extract from the specifications of the *Lafayette* Filter, while Fig. 1 shows an actual plot made of the passband showing figures for sideband attenuation with the carrier placed 300 c.p.s. beyond the 6 dB points. The manufacturers recommended method of connecting the filter into circuit is shown in Fig. 2. At Fig. 3 is shown a circuit of the filter. With any circuit used however the capacity shunting either the input or output of the filter must be kept to a minimum—certainly not greater than 30 $\mu\mu$F, otherwise the RF transformer will not tune to the centre of the passband.

This point about tuning the RF transformers leads on to another observation. The adjustment is quite critical because if they are not set up correctly

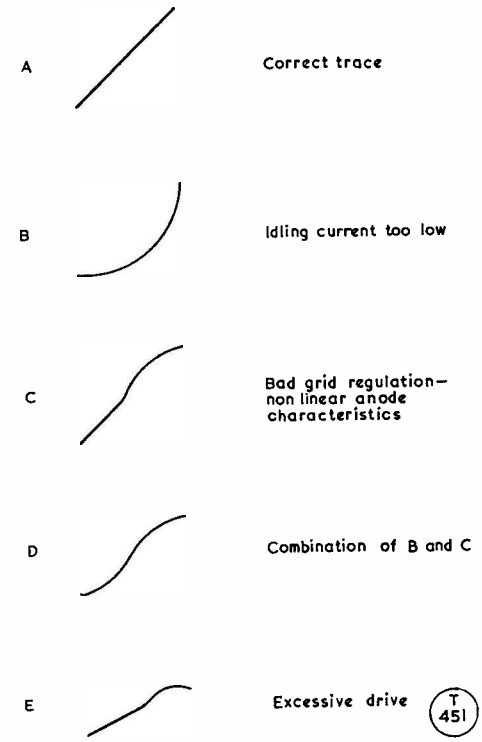

Fig. 8. What you can expect to see when using the set-up shown in Fig. 7.

then the top of the passband ripple can be quite high—about 6 dB to 8 dB at worst. The writer's observation is that the alignment called for is about the same as that required to align a home-built filter. It took as long, in fact. However, this point is probably outweighed by the unit's size in comparison to a home brew type.

Finally the carrier positioning. The makers quote one specific frequency for upper sideband and another for lower sideband (453·5 kc and 456·5 kc).

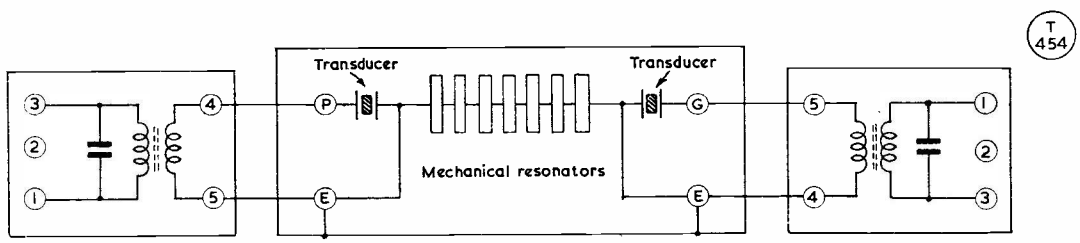

Internal arrangement of a Lafayette Filter Type MF-454-10AZ27.

DISCUSSING SINGLE SIDEBAND

DESIGN CONSIDERATIONS FOR MEDIUM POWER LINEAR AMPLIFIERS

Part VII

B. A. WATLING (G3RNL)

Previous articles in this series—covering the theory, design and operation of Sideband transmitters in some detail—appeared in our issues for December (1965), January, February, April, May and June. Together, they form a complete and up-to-date treatment of the subject in its amateur context.—Editor.

AFTER deciding the class of operation and configuration of a linear to suit one's requirements, next comes the problem of choosing the valve(s) and component values. The most important factor governing the efficiency of the amplifier is the output tank circuit. This, of course, applies to Class-C amplifiers as well as linears. Most PA's nowadays use *pi*-tank output circuits designed to match 50 or 75 ohm coaxial lines. The design of these is quite simple but, unless you have an inductance bridge, you must be prepared to do some coil pruning. Consider first the *pi*-tank tuning capacitor. In order to calculate this, one must take into account the Q of the tank circuit, the load resistance that the anode "sees" and the frequency. The anode load resistance, RL, is generally quoted by the manufacturer. If this is for two valves in push-pull then the figure quoted should be halved for a single valve. For two valves in parallel the figure for a single valve should be halved. Two 6146's in push-pull AB1 operation with an anode voltage of 750 volts should have an anode load resistance of 8000 ohms. For a single valve RL is equal to 400 ohms and for two valves in parallel it will be 2000 ohms. Calculation of *pi*-tank components is performed by rearranging and substituting known values in the various formulae.

Fig. 1 shows the problem diagrammatically. Ro is the impedance of the transmission line to which we wish to match the valve (50 ohms or 75 ohms).

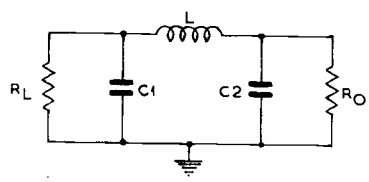

Fig. 1: Design of Pi tank circuit

T 455

RL is, as previously mentioned, quoted in the manufacturer's data; however, if this is not available then it must be calculated. No apology is made for the following maths. It is necessary!

An approximate (but near enough) and simple formula for the calculation of RL for valves operating in Class-AB1 or Class-B is:—

$$RL = \frac{1{\cdot}8\ Va}{3\ Ia(mA)} \text{ Kohm for Class-AB1}$$

$$RL = \frac{1{\cdot}8\ Va}{4\ Ia(mA)} \text{ Kohm for Class-B}$$

where Va is the anode supply voltage and Ia is the maximum signal indicated anode current in milliamps.

Assume the following requirements and constants for the old-faithful 6146 in Class-AB1:

Anode Volts	750v.
Max. sig. anode current (Ia)	110 mA
To match	50 ohms
Band	80 metres

$$\text{Then } RL = \frac{1{\cdot}8 \times 750}{3 \times 110} = 4{,}000 \text{ ohms, near enough}$$

To calculate the value of C1 (Fig. 1) first its reactance must be found by the formula:

$$Xc_1 = \frac{R_L}{Q}$$

The value of Q should be between 10 and 20 so, for convenience, assume the value of 15.

$$\text{Then } Xc_1 = \frac{4000}{15}$$

$$= 267 \text{ ohms}$$

The value of C1 can now be calculated by rearranging and substituting in the following formula:

$$Xc = \frac{1}{2\ \pi\ fc}$$

$$\text{From this } C1 = \frac{10^6}{2\ \pi\ f\ Xc}\ \mu\mu F, \text{ where f is in megacycles,}$$

$$\text{being } \frac{10^6}{6{\cdot}3 \times 3{\cdot}5 \times 267}\ \mu\mu F, \text{ or } 167\ \mu\mu F\ (C1)$$

For the calculation of C2 the relationship

$$\frac{Xc_1}{Xc_2} = \sqrt{\frac{RL}{Ro}} \text{ must be rearranged for } Xc_2$$

and then calculated.

$$\text{First, } \frac{R_L}{R_o} = \sqrt{\frac{4000}{50}} = \sqrt{80}, \text{ or 9 ohms.}$$

$$\text{Then, } \frac{Xc_1}{Xc_2} = 9$$

$$Xc_2 = \frac{Xc_1}{9} \text{ ohms}$$

$$= \frac{267}{9} \text{ ohms, say 30 ohms.}$$

$$\text{Again, } Xc = \frac{1}{2\ \pi\ fc}$$

$$C_2 = \frac{10^6}{2\ f\ Xc}\ \mu\mu F, \text{ where f is in megacycles}$$

$$\text{which is } \frac{10^6}{6{\cdot}3 \times 3{\cdot}5 \times 30}\ \mu\mu F, \text{ say 1300 } \mu\mu F (C2)$$

Don't be put off by all the figures and signs. It's easier than learning CW, you know! Try an example for yourself! Take an 807 in Class-AB1 with 600 volts on the anode and a maximum signal anode current of 70 mA. The answers should be approximately C1 = 130 $\mu\mu$F, and C2 = 1300 $\mu\mu$F, for 80 metres.

The importance of using the correct values of *pi*-tank components cannot be overstressed. If these are not right, severe distortion can result, let alone the lack of output. Correct values will also mean less harmonic output from the linear—important for TVI prevention.

The value of inductance generally is a matter of trial and error. It should be adjusted until tank resonance occurs at the correct value of C1. If an inductance bridge is available the required value can be calculated. Its reactance should be the same as that of C1. The formula $X_L = 2\pi fL$ can be rearranged to $L = \frac{XL}{2\pi f}\ \mu H$ where f is in megacycles. For the previous example quoted of a single 6146 for 80 metres then:

$$L = \frac{267}{6{\cdot}3 \times 3{\cdot}5} = 12\ \mu H, \text{ near enough.}$$

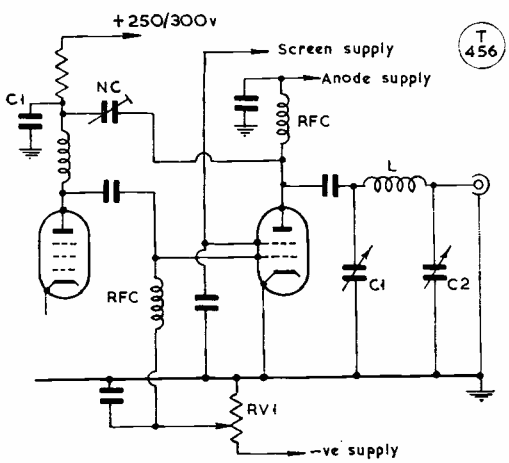

Fig. 2: Typical Class-AB1 Linear Amplifier

Circuit Details

Once the valve has been selected and the *pi*-tank components calculated now come the circuit details. Consider first grid-driven low power AB1 Linears Again, of course, the 6146 is a useful example. Fig. 2 Consider first grid-driven low power AB1 Linears. along with the previous stage an EF80 driver. Before connecting the anode and screen supplies to the PA it must be neutralised. Neutralisation is necessary to overcome the effects of internal anode-to-grid capacities which form a positive feedback path, causing the PA to oscillate. Not only this, but neutralisation also counteracts the effect of positive feedback caused by insufficient shielding between the input and output. This does not mean that you can use any old layout and get away with it by more neutralisation. Remember, this is negative feedback and as such will reduce the gain of the stage by a proportional amount.

The way in which this is achieved is by taking off the anode of the PA a small amount of signal and feeding this back to the "cold" end of the previous tuned circuit so that it will appear at the grid in anti-phase to the signal. NC is adjustable so that the amount of feedback required can be set up accurately. C1, the decoupling capacitor must be reduced in value so that it will not look like a complete short circuit to the fed back signal, yet will still adequately decouple the tuned circuit. Typical values are between 300 $\mu\mu$F and ·001 μF. The higher value C1 has, the more NC must be, hence the efficiency of the stage will be reduced. Typical values of NC will be about 5 $\mu\mu$F and could be left out completely for low frequency rigs providing the screening between input and output is nearly perfect. If neutralising is not performed when it is required, this will show up as maximum output of the PO not coinciding with a dip in anode current. This is why linear PA's *must* always be tuned for *maximum output* and not for a dip. For a single band rig this is not so important as the PA can be neturalised for that band, but even so it may not be perfect all over the band. Multi-band PA's should be neutralised on the highest frequency band used, as this is where instability is most likely.

Setting up NC then should be carried out with

the PA anode and screen supplies removed and the transmitter switched on with full carrier inserted, driving the valve hard into grid current. An indication of RF output is required and this is probably easiest accomplished by taking the output from the linear direct to the station receiver and using the S-meter as an indication. The PA tuning should be adjusted for maximum output first and then NC must be adjusted for minimum output. The PA should then again be adjusted for maximum output and the whole procedure repeated until the best *null* is obtained. It is important to keep checking the PA tuning because if this is not spot-on the phase of the output will not be exactly 180° different from the input signal, hence more negative feedback will be required than is really necessary.

Setting up the PA

Getting back to the simple linear of Fig. 2, when neutralising is complete the PA anode and screen supplies should be connected. With no signal input at the grid RV1 should be adjusted so that the zero signal standing current of the PA is that recommended. In the case of a single 6146, the makers say 12 mA, which should correspond to approximately −50 volts on the grid. This means that 50 volts of RF is required at the grid to drive the PA to maximum. However, in the interests of less distortion a 6146 should be biased further up the curve, to 25 mA standing current.

Tuning the PA must be done carefully. The 6146 is quite a robust valve, but some other types will not stand a single frequency input driving the valve to maximum for more than a second or so. Tuning is probably safest done with two tones of equal amplitude. If this is not possible then the procedure for tuning is to insert a small amount of carrier first and adjust the loading and tuning condensers for maximum output. Then, and this process must only be carried out for two or three seconds at a time, carrier should be inserted until the valve is just driven into grid current and the PA tuned for maximum output.

The load that the PA "sees" must be purely resistive. If not instability may result. It is generally stated that a linear PA should not be used with a load where the SWR is worse than 2:1. Generally, this is correct because a feeder having a 2:1 SWR means that the aerial impedance is reactive as well as resistive. It's the reactive component which causes instability in the PA. You could use an aerial where the SWR is much higher than 2:1 providing the reactance the PA "sees" is small.

With a correctly designed PA in Class-AB1, the anode current should increase smoothly as carrier is inserted up to the point when the grid begins to draw current. At this point the anode current should remain substantially constant and should only increase perhaps one or two milliamps when the carrier is increased, driving the valve hard into the grid current region. If the anode current does increase when the valve is driven into grid current then then cause is probably the bad design of the *pi*-tank.

The following statement may raise a few eyebrows. A lot of talk is heard like "a 'scope is essential if you're going Sideband". This is *not* necessarily so! An oscilloscope is really only needed when you are setting up a PA whose characteristics you don't know. If you follow the operational recommendation given in this series then a good clean signal should be emitted from your station.

TABLE I

Typical AB1 Operating Characteristics of various readily available Valves.

Valve Type	Va volts	Vg2 volts	Iao* mA	Ig2 mA	Ia max. mA	Ig2 max. mA	Nominal Vg volts	Approx. RL ohms	Approx. p.e.p. o/p watts
807 / 1625	600	300	18	0·3	70	8	—34	5400	28
	750	300	15	0·3	70	8	—35	6800	36
1646 / QV06-20A	600	200	14	0·5	114	14	—50	3000	47
	750	195	12	0·5	110	13	—50	4000	60
6HF5	800		14		250		—80	2000	115
813	2500	750	25		145	27	—95	10000	245
4X150A	1000	300	50	0	225	11	—50	2600	115
	1500	300	50	0	225	11	—50	3900	200
	1800	200	50	0	225	11	—50	4600	250

*The figures given for zero signal anode current are for maximum efficiency in Class-AB1 with maximum acceptable distortion. Less distortion will be achieved by increasing this value to about 80% of the anode dissipation of the valve in use.

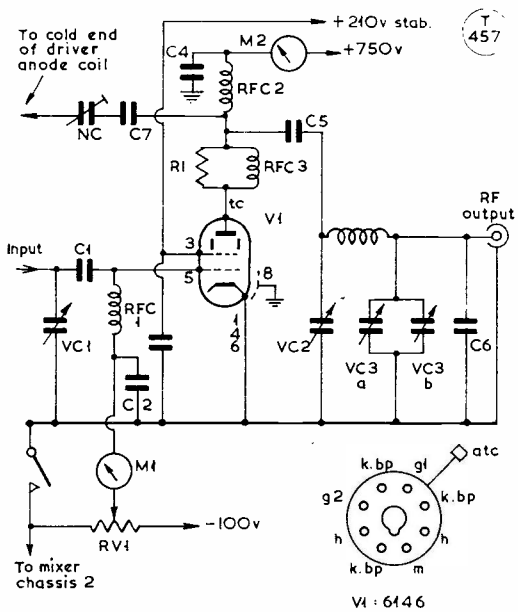

Fig. 3. Typical Class-AB1 linear amplifier, using a 6146, for the 80-metre band. For working on several bands, the pi-tank could be switched. C6 should be in circuit for 80m. and switched out for the higher frequency bands.

With AB1 linears an easily recognisable "over modulation" indicator is a grid current meter. The PA should be "talked up" until the grid current meter just, and only just, lifts off zero.

Now comes the decision, which the writer thinks is the most difficult part of the job, on which valve(s) to use for your PA. If your rig is for 160 metres only then the choice is simple. An 807 in Class-AB1 and 600 volts on the anode will provide you with the full output allowed (26·67 watts p.e.p.), or a 6146 with about 350/400 volts on it will do the same. The difficult choice comes when deciding for the higher allowed power (400 watts p.e.p. output) on the HF bands.

Does one go for a low-power AB1 linear that can easily be driven by the exciter and then follow this with a high power Class-B grounded grid linear, or does one go the whole way and build into the rig a high power Class-AB1 linear? (Remember AB1 amplifiers are easy to drive as they require no driving power.) The choice is yours! One or two points to remember is that AB1 linears are about 20 per cent less efficient than Class-B linears. This means that for a given input power the output of an AB1 linear will be less than a Class-B amplifier. This point needs thinking about in the light of power supply requirements. Talking about power supplies, some people say that they don't like the idea of a few kilovolts floating about in the shack. This can be overcome by using several lower voltage valves in parallel. The power transformer for this type of PA becomes a little more difficult to come by but it can be done. (Nine 6146's in parallel would provide the required output but this is hardly a practical proposition!) However, recently some U.S. colour-TV line output valves ("sweep tubes" in American) have become available at very reasonable prices, comparable in fact with surplus 6146's. These are designed for low-voltage high-current applications and have a high anode dissipation. The most popular of these is the 6HF5, obtainable from *Magazine* advertisers. With four of these in parallel and an anode supply of 800 volts the combined maximum anode current is about 1 amp, and the output will easily reach the maximum allowed in this country. One 6HF5 will give just over 100 watts p.e.p. output; about the same as two 6146's! You may think that this valve is a big one. Not so. It is of all-glass construction with a 12-pin base and about the same size as a 6146; just slightly taller in fact. Various other valves are possible and Table 1 gives a few of these with typical operation figures for Class-AB1.

A simple linear suitable to be driven by one of the mixer/amplifiers described in Part 5 of this series is shown in Fig. 3. For higher powers two valves in parallel can be used with the same component values except of course the *pi*-tank coil. Next time high-power linear amplifiers will be discussed—that is to say, those suitable to follow low power amplifiers having an output of 50 to 100 watts.

NOTE OF APOLOGY—JUNE ISSUE

We were very sorry to find that a number of our direct subscribers either did not receive their copy of the June issue, or got it very late. While it is easy to say "it was not our fault, as all copies went out on time in the usual way" (which they did), it is in fact very difficult to get at the cause of this failure, more especially as the incidence was random. We can only hope that it does not happen again. So far as we are concerned, there is no known reason why it should—and we can only repeat that any instance of late delivery should be taken up immediately with the local head postmaster, with the wrapper as evidence. If this bears the date prior to the day of publication, then clearly it is a matter for the G.P.O. We have the closest liaison with the despatching office—posting being in bulk on the morning of the Thursday before the Friday of publication—and the position is checked every month.

NOTICE—R.A.E. COURSES

With the August issue, as usual we shall start publishing lists of centres up and down the country—night schools, technical colleges and institutes for further education—at which tuition is offered for the Radio Amateur Examination, Subject No.55 in the City and Guilds of London syllabus. At most centres, the course opens with the winter session, starting about mid-September. All authorities interested are invited to let us have the details for publication. Those already notified are being held for the first list to appear next month.

DISCUSSING SINGLE SIDEBAND

FULL POWER LINEAR AMPLIFIERS — CIRCUITRY AND NOTES — THE MULTI-PARALLEL CONFIGURATION — SINGLE-VALVE HIGH POWER STAGES

Part VIII

B. A. WATLING (G3RNL)

There are no maths. in this discussion—it just suggests how you can choose a Linear for full power operation. It is evident that valves like the 813—once described many years ago as "capable of giving 400 watts RF output with just a little drive blown on to its grid"—or even several 807's in parallel, still have a large part to play in radiating a potent Sideband signal. Linears of this type are also wonderful RF amplifiers for serious CW operation.—Editor.

THERE are many circuits for high-power linear amplifiers, designed to follow an exciter giving about 50 to 100 watts output. Quite a few amateurs have experimented with these and the results and designs of some will be discussed here.

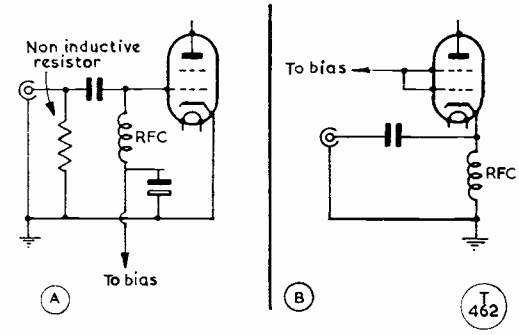

Fig. 1. At (A) is shown a conventional grid-driven linear amplifier (passive grid). Sketch (B) shows a normal cathode-driven (grounded grid) linear.

Re-capping a little, there are two configurations possible: A grid-driven amplifier generally used in Class AB_1 or Class AB_2, and there are cathode driven (grounded grid) amplifiers normally employed in Class-B. Fig. 1 shows the basic arrangement for these two configurations when used to follow an exciter. Observe that the grid driven amplifier is shown as a "passive grid," a resistor replacing a tuned circuit with a link input, which can be used if the drive available is lower than that needed to produce the required voltage swing on the grid of the linear amplifier valve.

The linear amplifiers about to be described one

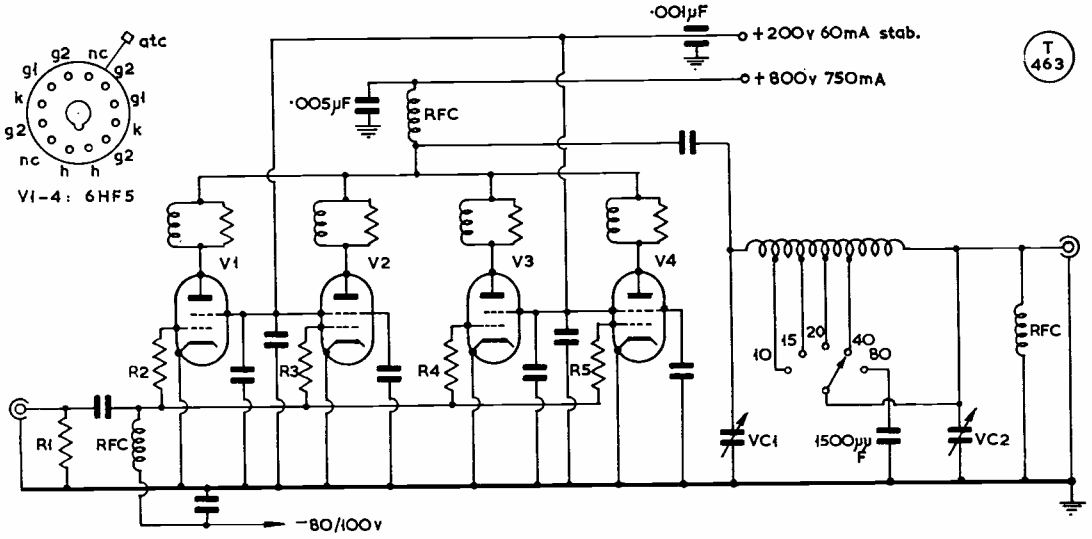

FIG. 2

Fig. 2. The G3NSN Linear RF amplifier, using four 6HF5's, the 6HF5 being a robust R.C.A. duodecar type designed for colour TV receivers. It is on a 12-pin base, has maximum ratings of 900v. plate HT with a dissipation of 28 watts, and runs rather hot, up to 225°C. In this circuit, R1 is 133 ohms; R2, R3, R4, R5, are each 10 ohms; VC1, 2/500 μμF; and VC2, 3-gang 500 μμF Rx type. All pins on the valve base connected to G2 are decoupled; all cathode pins are earthed; all leads carrying supplies are fed in on feed-through condensers; all heaters are decoupled. This degree of decoupling, necessary because the stage is not neutralised, is not shown here for the sake of clarity.

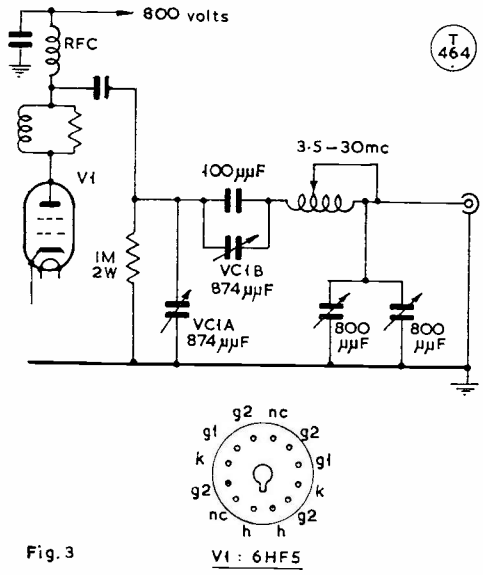

Fig. 3. The method used by Galaxy Electronics (U.S.A.) to overcome the problems associated with a low anode load resistance, RL. This linear amplifier uses no less than ten 6HF5's in parallel, and is rated at two kilowatts p.e.p.

can split into three groups. Group 1, Conventional grid-driven linears; Group 2, Normal cathode-driven linears; Group 3, Amplifiers with screen voltage derived from or controlled by the drive.

GROUP 1 — Conventional grid driven linears

The G3NSN Linear: (First described *RSGB Bulletin,* July 1965). This is an interesting design in that it uses four 6HF5's in passive grid (*see* Fig. 2). With the grid resistor shown about 20 watts input would be required to drive the linear to its maximum. With only 800 volts on the anodes the output will easily reach the maximum in this country (400 watts p.e.p.). You will observe that the *pi*-tank capacitor values are unusually high. This is due to the fact that the RL of a 6HF5 is only 2000 ohms giving a total RL of but 500 ohms with four in parallel. A parallel push-pull arrangement could be used with these valves bringing the values to a more reasonable figure, but bandswitching becomes cumbersome. Table on p.356 gives performance details of this amplifier.

An interesting point came to light in *QST* for January 1966, where a 2 kW p.e.p. linear, made by Galaxy Electronics in the States, used ten (!) 6HF5's in parallel. The low RL (200 ohms) and large output capacity problems are overcome, as shown in Fig. 3, by introducing a series variable capacitor in the horizontal leg of the *pi*-tank circuit. The value of the coil therefore becomes more manageable.

GROUP 2 — Conventional cathode-driven linears

Grounded grid linears are inherently stable amplifiers, because the input is effectively screened from the output by the grid(s) which is (are) earthed. No neutralising is required. Certain valves, the 807 being the most common, can be operated with zero bias. A design, which cannot be improved on for simplicity, is shown in Fig. 4. Four 807's—or 1625's (with 12v. heaters) or 6L6's could be used—provide about 150 watts p.e.p. output. HT voltages up to 1000 volts can be used.

For those who may have 813's around a design for one is shown in Fig. 5. With 2500 volts on the anode about 350 watts p.e.p. output will be available for about 500 watts p.e.p. input. Zero-signal anode current could be as low as 15 mA.

The signal input is fed to the filament *via* a ·01 μF capacitor which must be a ceramic type. The filament transformer is isolated from RF by means of bifilar wound RF chokes. At maximum output

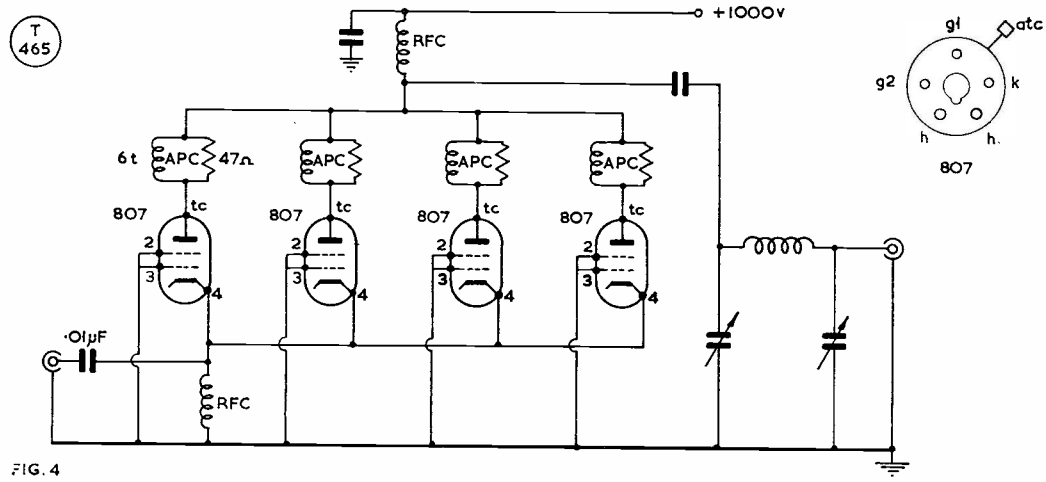

Fig. 4. Simple type of grounded-grid linear amplifier using four 807's in zero bias, capable of giving nearly 150 watts p.e.p. output. Note that the valve heaters should be fed via bifilar-wound RF chokes.

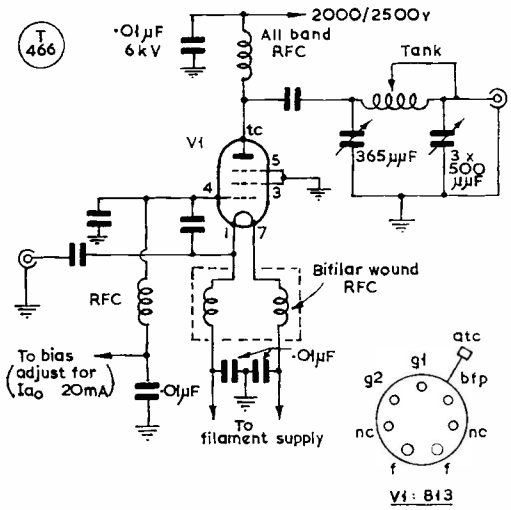

Fig. 5. An 813 as a grounded-grid linear amplifier, useful working figures being Ia max., about 200 mA, and Ig1 max., 50 mA. The filament input condenser should be about ·01 μF, and a good ceramic type.

grid current will be approximately 50 mA.

GROUP 3 — **Linear amplifiers with drive-controlled screen voltage**

G3MHQ "RF Ultra Linear" (Described in *RSGB Bulletin,* January 1963). This is an unusual and interesting design (Fig. 6) in that a conventional Class-B 813 linear is modified to incorporate screen-grid voltage variations to follow the anode voltage. As G3MHQ in his article states, if and when the anode voltage falls below the screen voltage then distortion will occur. The RF transformer comprising L3 and L4 effect a form of negative feedback. Assume that the anode voltage is falling then the voltage induced into L3 opposes the screen bias voltage, hence reducing the screen potential to maintain linearity. G3MHQ states that approximately 200-250 watts p.e.p. output can be obtained with only 1200 volts on the anode.

G2MA Linear (First described SHORT WAVE MAGAZINE, February 1959). Fig. 7 is the circuit of the now famous G2MA Linear, designed nearly eight years ago. Screen grid voltage is derived from a potential divider network comprising RV and V3. With no drive applied V3 has no grid bias and therefore conducts heavily drawing its current through RV. Virtually all of the supply appears across RV therefore the screen grid of the 813 is near zero, almost cutting off the valve. When drive is applied part of it is tapped off

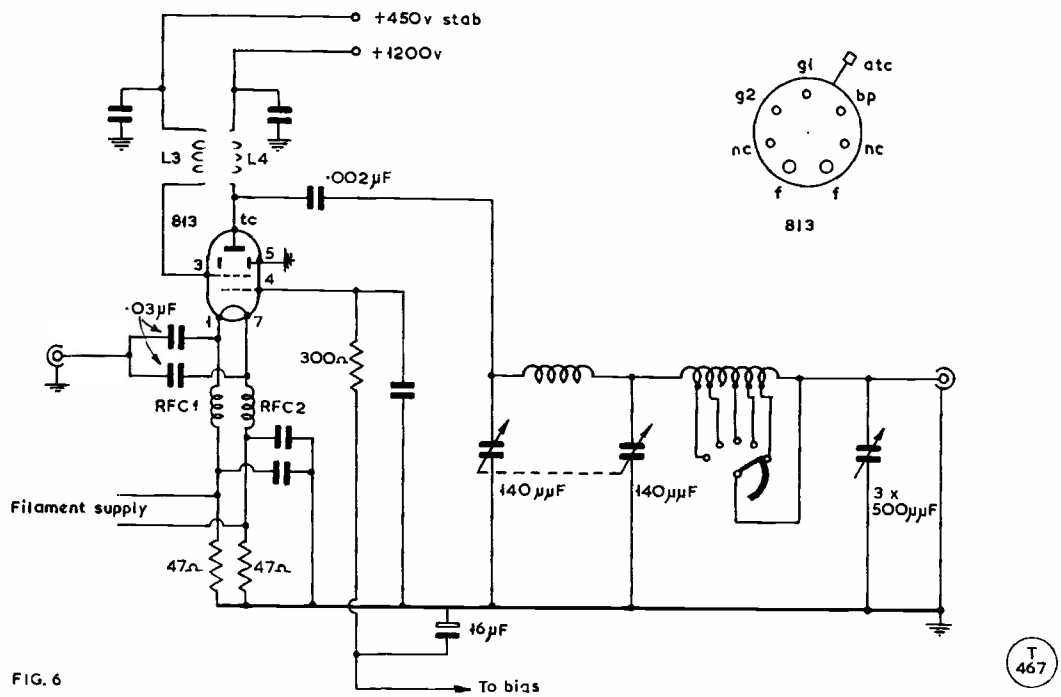

Fig. 6. The G3MHQ "ultra linear amplifier" using an 813, which for years has been available for all manner of high-power RF applications; a single 813, correctly loaded and driven, will give up to 400 watts RF output, over the amateur HF range. Looking at the circuit here, L3 and L4 form an RF transformer, wound on 1in. diameter polythene tube 4in. long. L4 is close-wound with 28g. over 3in.; L3 is ditto over 1in.; insulation between L3 and L4 must be good. The RF chokes are 30 turns of 16g. on a 1in. diameter former, remembering that the filament current of an 813 is 5 amps.

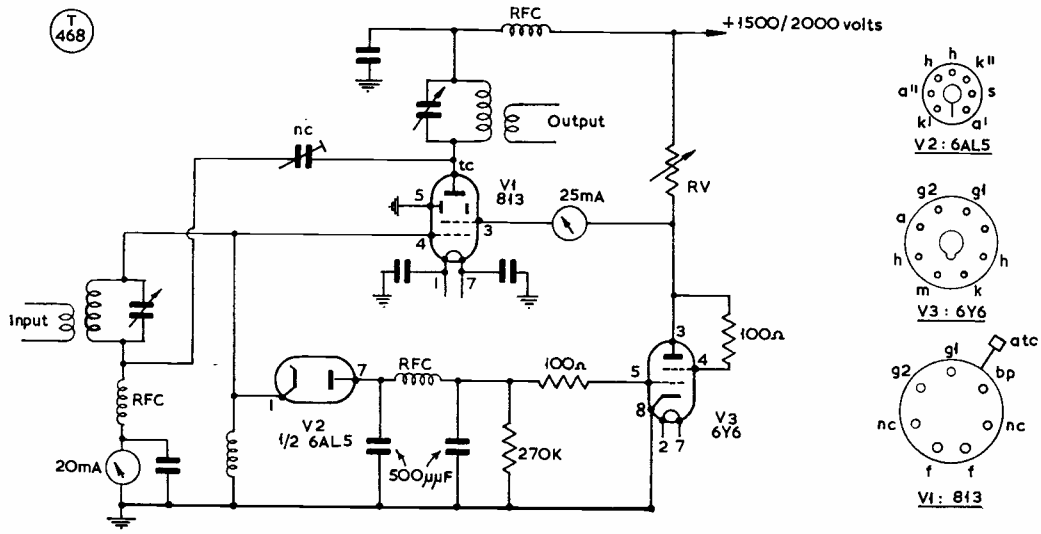

Fig. 7. The G2MA Linear Amplifier, first described in the February 1959 issue of "Short Wave Magazine," uses an 813, and the functioning of the circuit is discussed in the text. The variable resistor RV should be adjusted so that the current drawn by the 6Y6 is just less than the plate mA at which maximum anode dissipation would occur. All RFC's shown in the circuit can be 2.5 mH.

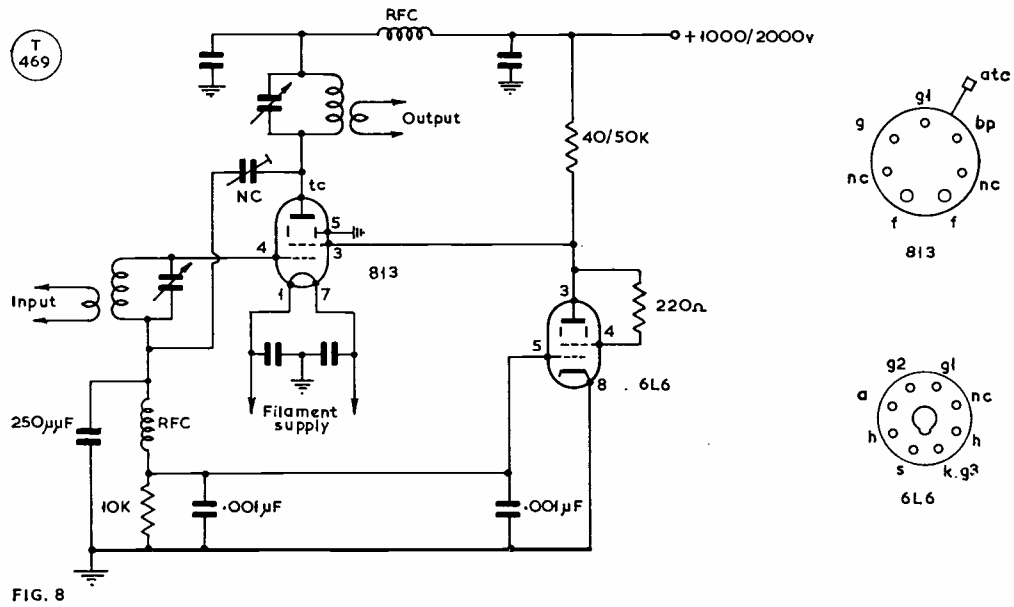

Fig. 8. Circuit diagram of the ZL1AAX Linear—also described in detail in the February 1959 issue of the Magazine—is similar to the G2MA design except that rectification of the grid driving current is used to give the controlling DC voltage for the 6L6.

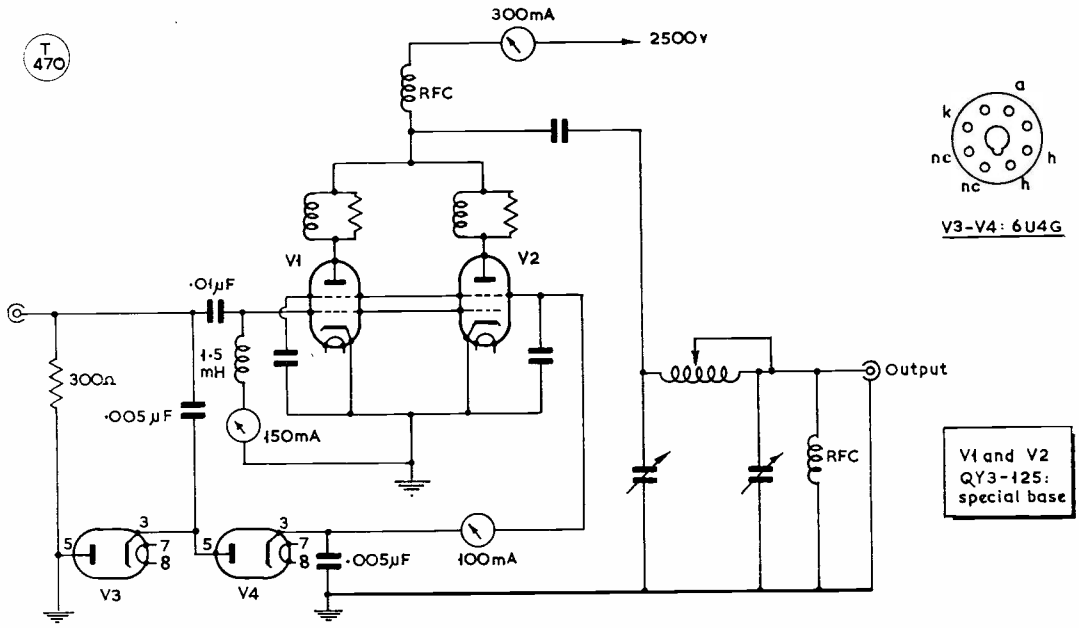

Fig. 9

Fig. 9. The more modern G2DAF linear amplifier, using a pair of Mullard QY3-125's. The screen voltage for these is derived from the drive using a conventional voltage-doubler circuit taking a pair of 6U4GT's. An 813 as the PA could also be used in this sort of circuit, as explained in the text. The tank details are omitted for clarity.

via diode V2, which rectifies this to produce a negative voltage proportional to the input. This negative voltage is applied to the grid of V3 causing it to conduct less. The voltage drop across RV therefore decreases raising the screen voltage. The only adjustments required to set up this amplifier is the neutralising (adjust as described in Part VII of this series) and RV. The value of RV should be such that with no drive the DC input to V3 is just below the rated maximum anode dissipation.

ZL1AAX Linear. (First described in SHORT WAVE MAGAZINE, February 1959). Fig. 8 is the circuit of the ZL1AAX Linear. This is one step further in simplification than the G2MA linear in that the rectifying of the drive to provide bias for the clamp valve is effected by the diode formed by the grid and cathode of the 813. Apart from this the action of the circuit is exactly similar. As regards efficiency and linearity there is apparently nothing to choose between this and the G2MA linear, both having slightly greater efficiency than a Class-B zero-bias linear, and both exhibiting linearity almost as good as Class-AB_1 linear.

G2DAF Linear. (First described in *RSGB Bulletin*, April 1963). If we assume that the G2MA is the start of the family of screen grid control linears then ZL1AAX took a step in one direction by removing the rectifying diode from the circuit and using the 813 itself as the diode, while G2DAF has taken a step in the opposite direction. Fig. 9 is the original circuit using two Mullard QY3-125 valves. The article also discusses the circuit differences when using two 4X150A's and in a later article (*RSGB Bulletin*, May 1963) he describes how an 813 will perform (400 watts p.e.p. output with only the one valve).

In this circuit the whole of the screen grid voltage is derived from the drive. A standard voltage doubler circuit using two 6U4's (or EY81's) provide the necessary voltage. A single 6146 linear will just about drive the G2DAF to maximum. A linear comprising two 6146's is however advisable—as mentioned previously it's better to have some in hand than barely enough.

A final word on the subject of linear amplifiers for the moment—and no excuse is made for repetition —*do not* try to "talk up" the anode current meter on peaks to more than half the maximum signal

TABLE I

Amateur Band Operating Conditions (400 watts p.e.p.) Four 6HF5's in Parallel.

Va = 800 volts	Single-Tone	Two-Tone
Anode current (zero sig.)	120 mA	120 mA
Anode current (maximum sig.)	750 mA	475 mA
Power Input (DC)	600 watts	380 watts
P.E.P. Input	600 watts	600 watts
Ig_2	40 mA	24 mA
Ig_1	0 mA	0 mA
Vg_2	200 volts	200 volts
Vg_1 (peak drive)	92 volts	92 volts
Anode Dissipation	200 watts	180 watts
P.E.P. Output	400 watts	400 watts
Power Output (mean)	400 watts	200 watts
Anode Efficiency	66 per cent	52 per cent

current unless you've checked for flattening on a 'scope to find the correct level. Apologies to the SSB operator (not heard by the writer), who, on 80 metres, was putting out a foul signal—dogs barking, birds twittering and the clock some feet away from him sounding like a sledge hammer. The station he was working thought " he sounds loud " (!) and asked the offending station what power he was running. The reply was a deafening whistle into the microphone followed by " Well, it reads 200 mA on the anode current when I whistle, but it's the devil of a job to keep it up there while I'm talking." ! ! Sorry, whoever you may be, to use this statement as an example, but it does illustrate the point forcefully. A lot of people new on SSB have the same problems. The whole point is that the anode current meter has not got a fast enough response to follow voice peaks so don't try to lift it too high—only about half (not more) of the maximum. Prove this yourself with a bug key (whatever that may be for). With key constantly down (or to the side, or whatever) the anode current will register, say, 100 mA. If you now send a string of dots then the anode current will only register the average level. The faster the dots the higher the anode current. Now look at your speech waveform on a 'scope and imagine what the meter will try to do. It can't, though—it's not fast enough.

Editorial Note: The February 1959 *Short Wave Magazine* referred to here was in fact a vintage issue as regards Linear Amplifiers for Sideband. It discussed in some detail designs now seen to have been years before their time. This issue of the *Magazine* is now, regrettably, right out of print with us, but there must be tens of 1000's of copies in the hands of readers. If you are interested and have not been a regular reader long enough to possess a copy, or cannot borrow one locally, you would almost certainly be able to get Feb. '59 by looking for it in our Readers' Small Advertisement section, through which many such items change hands.—*Editor.*

TOP BAND GDX NOTE

GM5PP/P ROUND THE SCOTTISH COUNTIES

G5PP, Bob Palmer, of Coventry, now has the distinction of having operated on Top Band from every Scottish county, and in so doing has covered 15,000 miles in that country.

He made his eleventh annual trip during June 25-July 8 and once again put out a remarkably consistent signal, being worked on all 13 nights from the writer's QTH at Peterborough, Northants.

Aerials varied from 300 to 600 feet in length, 26 gauge cotton covered wire (with no insulators) being used, at a height of 45ft.

For the first four nights, GM5PP operated from the Ettrick Valley in Selkirk. Then followed Comrie in mid Perth; Argarton, near Arrochar, Argyll; Loch Ochiltree, Wigtown; and Glen Trool, Kirkcudbright; the tour concluded with one night at Troutbeck, Nr. Keswick, Cumberland.

GM5PP's absence from the band on the night of July 3 was due to his battery becoming " flattened " through daylight working with GM's. Outstanding contacts were those with G3IUD/P, who was at The Lizard, Cornwall; G3SIG, Cheshire, when signals were S8 each way, which for a noon contact from a valley in the mountains in Selkirk, was extremely good; and GM3TMK, Ross, this also being in daylight with both signals S9; GM5PP was operating from Argyll during this latter QSO with the Grampians on the path.

Expressing himself quite pleased with the trip, GM5PP regretted some lack of co-operation on the part of some stations who persisted in working on the same channel when they must have known that activity was on from a rare county. The writer feels that this view will be shared by many operators who were anxious to work GM5PP/P. It is to be hoped that Bob will continue the good work next year.

G2NJ.

During his Top Band expedition to Scotland, Bob Palmer, GM5PP/P (right) was visited by GM3TDS, when the 5PP camp was in Glen Trool, Kirkcudbright. As many old 160m. hands will know, G5PP (Coventry) has for several years made a speciality of going on a /P holiday trip to Scotland. He has now worked round the U.K. on Top Band from all Scottish counties, and has also logged about 15,000 miles in the process.

DISCUSSING SINGLE SIDEBAND

ANCILLARY CIRCUITS — VOX AND ALC—IDEAS FOR SLICK SIDEBAND OPERATING — COMPRESSION — TRANSVERTERS AND CONVERTERS

Part IX

B. A. WATLING (G3RNL)

THE effectiveness and ease of operation of any SSB transmitter can be quite easily improved by the addition of various ancillaries. The most common accessory is a VOX unit, short for "voice operated switch." This is useful for fast break-in, nets or rag chews where constructional work can be carried out while in QSO because both hands are free. There are a lot of people who do not like VOX operation; the reason being that they can hear the change-over relay drop out between phrases. But this is the idea of it. Going are the days where each station in a QSO makes a speech, each unrelated, and by the time it gets round to you everything that everyone has said has been forgotten. It takes far longer to exchange information using long-over QSO's, therefore the quicker one can complete these rubber-stamp QSO's the more room there is on the band for more useful ones. On the other hand, with technical-discussion QSO's, and there are still some going on (!), much more information can be transferred by working fast break-in. It's no good, when using VOX, holding the relay in with *Aaahs* and *Ers* coupled with coughs and splutters. The chap you are working, who is attempting to get in some remarks, is going frantic. The same applies to PTT ("press-to-talk") operation. Many a time the writer, and many other stations he has heard, have doubled with another station in the QSO because he has asked a question yet still keeps his finger on the button.

* * * *

Let us consider some VOX circuits. The object is to operate a relay when you talk into the microphone and to allow it to release when you stop talking. Some delay must be introduced into the release time to prevent the relay dropping out between syllables. The operating time must be very fast to prevent the beginning of the first word from being clipped. A relay connected in series with a valve is generally used. With the valve biased to cut-off the relay will be de-energised. A positive voltage applied to the grid of the valve will cause it to conduct and hence operate the relay. The positive voltage may be derived by rectifying the amplified audio signal. To increase the usefulness of a VOX circuit it is advisable to add "anti-trip." This allows loudspeaker operation with voice controlled break-in without the sounds emitting from the loudspeaker operating the relay. This is achieved by rectifying the output from the receiver and feeding into the circuit a voltage of opposite polarity to the rectified speech signal. This means that any signal

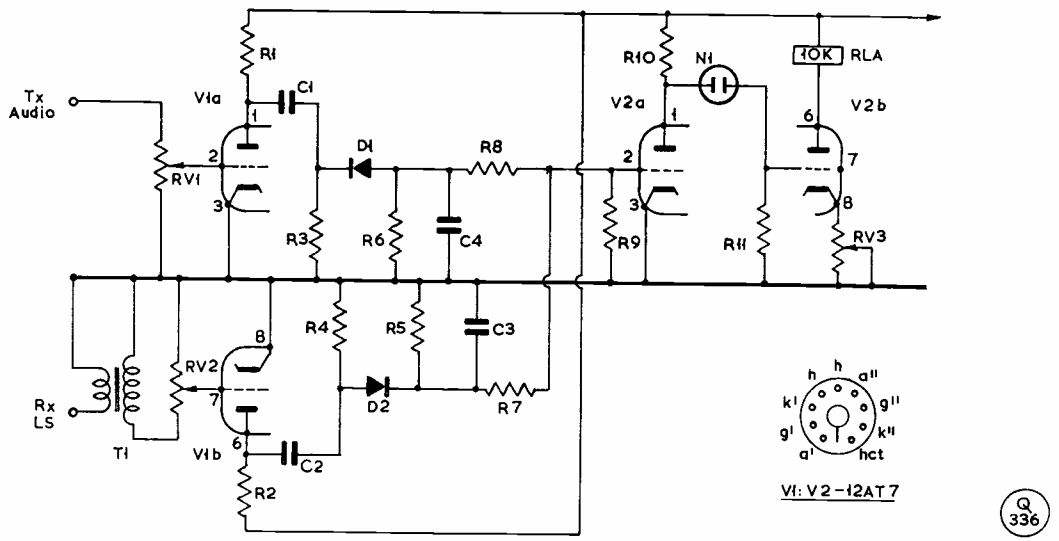

Fig. 1. A typical Vox circuit, for which values could be: C1, C2, C3, 0·1 μF; C4, 0·5 μF; R1, R2, R3, R4, R10, 100K; R5, R6, 47K; R7, R8, 10K; R9, 2 megohms; RV1, RV2, 1 meg. potentiometers; RV3, 5K potentiometer; N1, 90v. neon; D1, D2, OA79; and V1, V2, 12AT7. RV1 is the Vox sensitivity control (see text), and T1 a low-to-high impedance transformer.

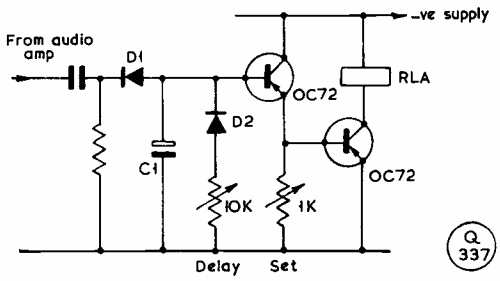

Fig. 2. Delay and relay drive circuit for a transistorised Vox unit — see text.

which appears simultaneously from both the receiver and the microphone will cancel and therefore will not operate the relay. Fig. 1 shows a circuit of a typical VOX circuit with anti-trip. V1A amplifies the microphone signal and also acts as an isolating stage so that the non-linear rectifying action of D1 does not introduce distortion in the Tx audio chain. A convenient point to tap off the audio from the Tx is at the audio gain control—*not* off the wiper but from the top of the track, so that the Tx audio gain adjustments do not affect the VOX circuit. RV1 acts as the VOX sensitivity control.

V1B is the Rx signal audio amplifier and again acts as an isolating stage. T1 effects impedance transformation from the low impedance of the speaker to the high impedance input of the valve. This transformer may be dispensed with if the Rx audio is tapped off at a high-impedance point. Then, however, it must be after the volume control.

D1 rectifies the audio to produce a negative DC to apply to the grid of V2a *via* R8. As the grid is driven negative the valve will conduct less so that the anode potential will rise until the voltage across the neon N1 will be sufficient to cause it to strike. When this occurs the grid of V2b will be taken positive causing that valve to conduct, hence operating the relay. Delaying the release of the relay is achieved by R6 and C4. The time constant may be varied by changing the value of C4 or alternatively making R6 variable.

Anti-trip is effected by rectifying the amplified Rx audio with D2 and applying this *via* R7 to the grid of V2A, where it will oppose any signals from the microphone circuit. Setting up this circuit is achieved by first adjusting RV3 until the relay operates, then backing it off until the relay *just* releases. Adjust RV1 so that when speaking into the microphone at your normal level the relay operates. Tune in a signal on the receiver and turn up the audio gain to a fairly high level. Adjust RV2 so that the receiver signal does not trip-in the relay.

Suitable Transistor Circuit

Transistors can be used to make a very compact VOX circuit. The delay network used at G3RNL is slightly different from the valve circuit. It was found that the drop-out time varied, depending how long one spoke into the microphone. This is due to the capacitor charging to a greater voltage the longer the DC appears on it. This is overcome by using a limiter D2 and 10K variable following the diode rectifier D1, thereby fixing the voltage level to which the capacitor C1 can charge. Fig. 2 shows how this is achieved, together with the relay drive transistors.

For those of you who still operate CW full break-in operation can be achieved using a VOX circuit by keying a tone into the microphone socket. To add this facility to an existing Tx or to build it into a new one the first audio stage can be switched to form a phase shift oscillator. Keying is probably best achieved on the VOX amplifier, as shown in Fig. 3 below.

Automatic Level Control

VOX and full break-in keying eases the operation of the rig but how about improving its effectiveness? This can be achieved simply by means of circuitry to control the level of signal appearing at the input of the PA. This will raise the average level of signal without overdriving the PA. Automatic Level Control or ALC this is generally termed. Its effect can be an apparent increase in signal strength of about one S-point. You can get more than that but it doesn't sound too good, thereby reducing readability instead of improving it. A simple but very effective circuit (Fig. 4) which requires no adjustment and one used very successfully by the writer uses only two diodes, two capacitors and one resistor. It can, in its simplest form, only be used with Class-AB1 PA's. The AB1 PA will be driven to maximum output without distortion just to the point where grid current occurs.

If one were to sense the onset of grid current and reduce the gain of previous stages when this starts, then a form of compression results. This circuit has a delayed action because nothing happens until grid current occurs. All signals which are lower

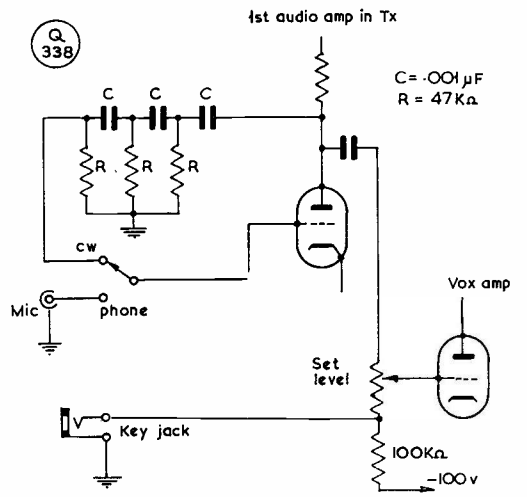

Fig. 3. Method of tone-keying an SSB Tx for full break-in CW working — see text.

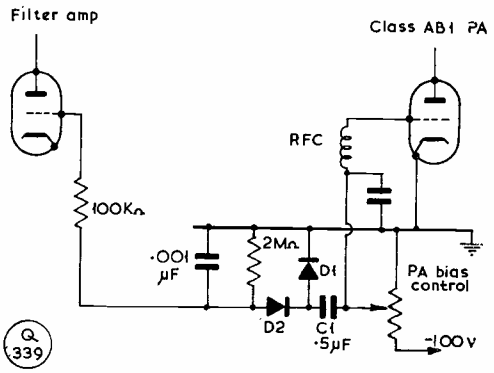

Fig. 4. Showing an ALC ("automatic level control") circuit for use with a PA in Class-AB1. The diodes D1, D2, should have a p.i.v. rating of about 150v.

than the level required to drive the PA into grid current are unaffected. Only when a signal appears that would overdrive the PA will the Tx gain be reduced. The onset of grid current is detected by "looking" at the grid of the PA. As soon as this goes from negative to positive then grid current flows. If the positive voltage peaks that occur on the grid are processed by reversing their polarity and voltage doubling, the resultant negative voltage can be used to control the gain of an early stage (or stages) of the Tx. Fig. 4 is the basis of the ALC circuit, so described. D1 and D2, with C1, form a conventional voltage doubler circuit connected for negative voltage output. The point where C1 is connected to sample the grid voltage must be at a point where no RF appears. If not then as the RF appears on the grid of the PA the ALC voltage will increase proportionally. Also the negative bias on the grid of the PA must be smooth. Any ripple will be voltage doubled by C1, D1 and D2, and appear as a standing negative voltage on the ALC rail. The most convenient point to pick off this grid voltage is on the wiper of the potentiometer used for setting the negative bias for the PA grid.

As previously mentioned, the circuit of Fig. 4 may only be used with PA's operating in Class-AB1. It is a handy arrangement and can be expanded upon so that it may be used with any PA. In this case a diode must be provided which does the same as the diode formed by the grid and cathode in an AB1 PA. By providing an adjustable bias to the diode, the p.e.p. output can be set and will not be exceeded (unless you try to push it really hard). Fig. 5 details the circuitry for this type of ALC circuit.

Driver Control

The effectiveness of these circuits can be improved upon by applying the ALC voltage to the driver as well as the filter amplifier. (Collins and one or two other companies do this with varying time constants for the two stages.) Some even go to the extreme of amplifying the ALC to provide greater control. However, experience at G3RNL has been that only the filter amplifier being controlled gives more than adequate results. One point here is that the Tx must have gain in hand before this circuit can be usefully incorporated. If gain is lacking then the filter amplifier, if it is either an EF89, EF85 or similar relatively low slope variable-*mu* valve, could be changed for an EF183 which has a very high slope.

Compression—RF or Audio

One word of warning when using any form of compression whether it be RF compression as previously described or audio compression which may be used to advantage but requires more circuitry than the RF version: Be careful not to exceed the PA ratings. With the higher average input to the PA substantial decrease in valve life can result if the valve is not designed to take it. The final word on compression is that the writer prefers this RF arrangement because one does not need to switch it in and out. Just turn up the audio gain to make it operate. Back off the audio gain to make it inoperative. When checking these circuits out you'll find, if it's working correctly, that when turning up the audio gain control while monitoring grid current (in an AB1 PA) the meter will not kick up more than 100 μA to 200 μA. If, when at this level, you short circuit the ALC line to earth the grid current meter will slam against the FSD stop. It will be obvious then that not only does this form of compression improve the effectiveness of the Tx but also it prevents overdriving the PA, hence reducing the possibility of non-linearity which would cause distortion and the dreaded TVI!

So much for easing operation and improving the effectiveness of a rig, now let's see how to increase the versatility.

Other Ideas

Quite a few stations have either home-brew or commercial rigs which do not cover all bands. The owners of the commercial rigs are loath to get inside the gear to make mods. because the resale value of the rig might decrease. The home-brew owners have similar views because while the mods. are being carried out they are off the air. Both types do not view the prospect of building a complete new Tx for these other bands with much enthusiasm. Some form

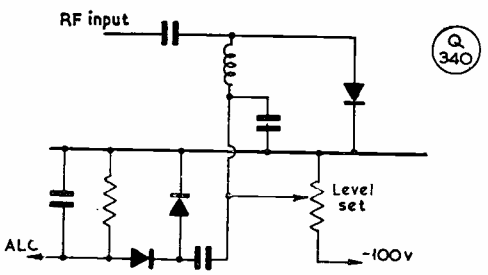

Fig. 5. Circuit of Fig. 4 modified for use with a Class-AB2 or Class-B RF power amplifier stage.

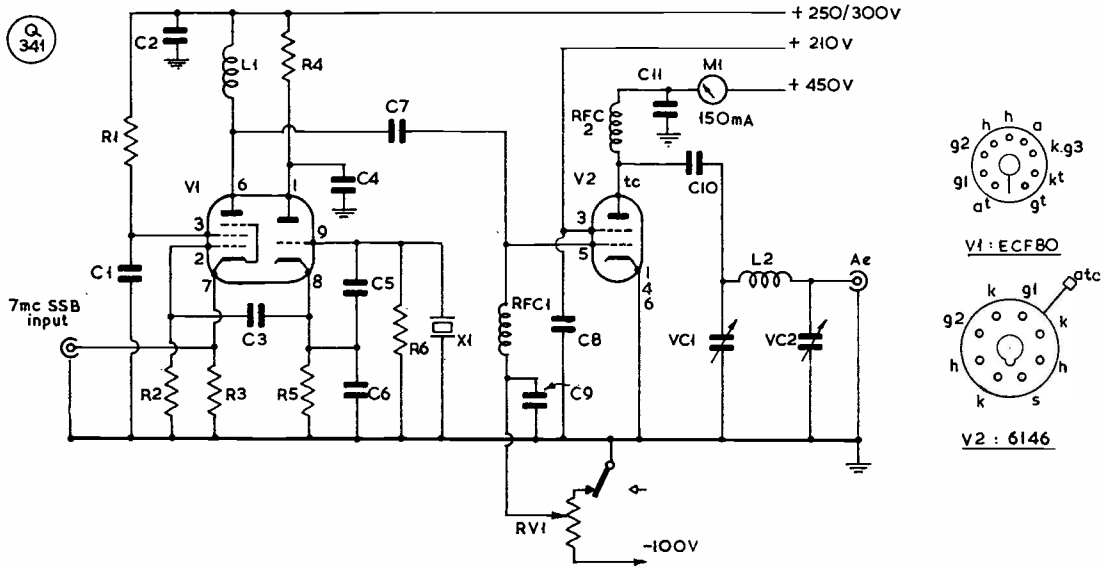

Fig. 6. Circuit arrangement for a converter suitable for getting on to 160 metres with a 7 mc Sideband input — see text. Values can be taken as : C1, C2, C4, C8, C9, C11, ·01 μF ; C3, C7, 100 μμF ; C5, 22 μμF ; C6, 250 μμF ; C10, ·001 μF ; R1, R6, 27K ; R2, 100K ; R3, 50- or 75-ohm, minimum rating 5w., to suit output impedance of Tx ; R4, 10K ; R5, 1K ; RV1, 10K ; VC1, 365 μμF ; VC2, 3/500 μμF ; xtal, 5·2 mc ; V1, ECF80 ; V2, 6146 ; RFC's, 2·5 mH.

of high level conversion then is the answer. An SSB signal from one of the bands covered can be heterodyned to the required band. Care must be taken though in choosing the band to use and the heterodyning frequency so that unwanted spurious signals do not occur and that the final output is on the correct sideband.

Let's consider the owner of a Tx covering 80 metres to 10 metres. If 160m. is required then the best arrangement is to use the 7 mc to 7·2 mc LSB output of the Tx and subtract from this an oscillator signal at 5·2 mc, giving 1·8 mc to 2 mc LSB.

Some amateurs, in order to get a low level 7 mc output from the Tx, tap off the output from the driver and disable the PA for 160m. operation. But for those who really are against getting inside the

The station shown here (GB3LST, Scunthorpe, on a special occasion), was using modern SSB equipment of British manufacture—a KW-2000A, left and under the hand of G3TMC, and the matching KW-600 linear amplifier (right). At centre is the PSU, with speaker incorporated, for the KW-2000A all-band transceiver. The KW-600 has its own built-in PSU and does not cover 160 metres.

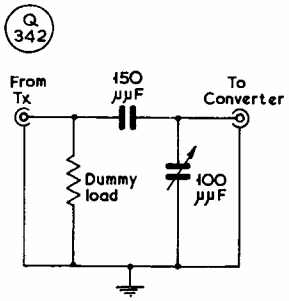

Fig. 7: Method of reducing the signal applied to a converter.

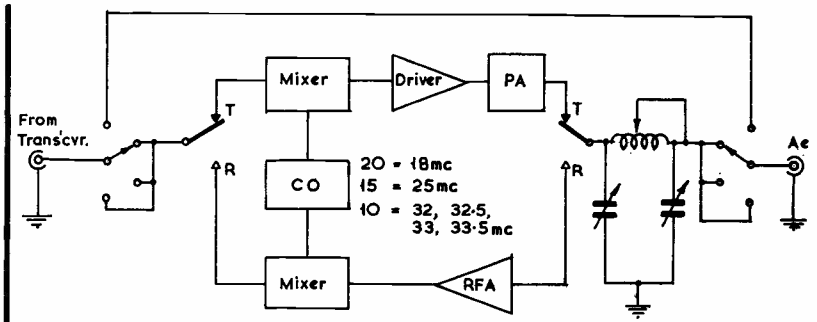

Fig. 8: Block diagram of Transverter for 20, 15 and 10 metres from 80 metre input. Ten metres is covered in four 500 kc steps.

rig this is not absolutely necessary. You can use the high level output from the aerial socket to drive the converter. This can mean, however, that the Tx PA is running more input than the 160m. PA in use! This need only be so if it is awkward to reduce the output of the main transmitter by use of a drive control. Fig. 6 is the circuit for a 160-metre converter. For those who cannot reduce the output of the exciter by the required amount, use the method shown in Fig. 7.

How about transceivers, though? This can also be extended in band coverage with the use of an outboard converter. For those who own something like an NCX3 or even one of the single-band transceivers from *Heathkit*, a transmitter-receiver converter (let's call it a transverter from now on) can be constructed to maintain the full facilities and advantages of the basic transceiver. Fig. 8 is a block diagram of a transverter to convert an 80-metre signal to 20m., 15m. and 10m., and act as a crystal-controlled front end using 80m. on the receiver side as a tunable IF.

TABLE 1

Input	1st Conversion Oscillator	IF	2nd Conversion Oscillator								
			160	80	40	20	15	10	10	10	10
7 mc to 7·5 mc	2 mc	5 mc to 5·5 mc USB	7 mc	9 mc	—	9 mc	16 mc	23 mc	23·5 mc	24 mc	24·5 mc
14 mc to 14·5 mc	18 mc	3·5 to 4 mc LSB	—	none	3·3 mc		25 mc	32 mc	32·5 mc	33 mc	33·5 mc

The frequency conversions shown in Fig. 8 are OK for 80-metre output, but if you have, say, a rig without 80m. included, then using either the 20m. or 40m. output two conversions are required. Table I at left details the frequencies for the conversion oscillators for either a 40m. or 20m. input. The first conversion from 7 mc produces an IF at the neutral frequency 5 mc to 5·5 mc. This is then converted, by mixing with the signal from the second crystal oscillator, to the required amateur bands. For a 20m. input mixing to 5 mc to 5·5 mc is undesirable, therefore the first conversion is to 80m. Other bands are as per the 80m. input converter.

" . . . It reminds me to give my callsign every fifteen minutes . . . "