Ring Multi Generates Fast, Variable Output Pulses

With only one transistor per stage, the ring multivibrator circuit, shown in the figure, can generate fast, sequential pulses of variable widths. The basic circuit can be repeated any number of times, giving consecutive outputs suitable for sampling gate drivers, delayed sequential triggers, time-sharing control circuits, etc. Power consumption is low because only one stage conducts at a time.

Each stage is basically a constant-current, nonsaturating circuit providing negative output pulses. The RC combination in the transistor base determines pulse width. Pulse width may vary as much as 3 to 1 for consecutive outputs, without any noticeable affect on the collectors. Fast transistors in the circuit can yield speeds of less than 100 nsec.

Circuit operation is as follows: As each transistor finishes its conducting period and returns to the 12-v level, its collector produces a positive transient. This positive swing, coupled to the following base, turns on the next stage. The sequence can be made repetitive by coupling the last stage back to the first. Various load conditions can be accommodated by adjusting the emitter and collector resistors. By keeping the gated transistor on, the individual holding gates can stop the cycle without prematurely interrupting the sequence.

John A. MacIntosh, Application Engineer, Fairchild Semiconductor Corporation, Mountain View, Calif.

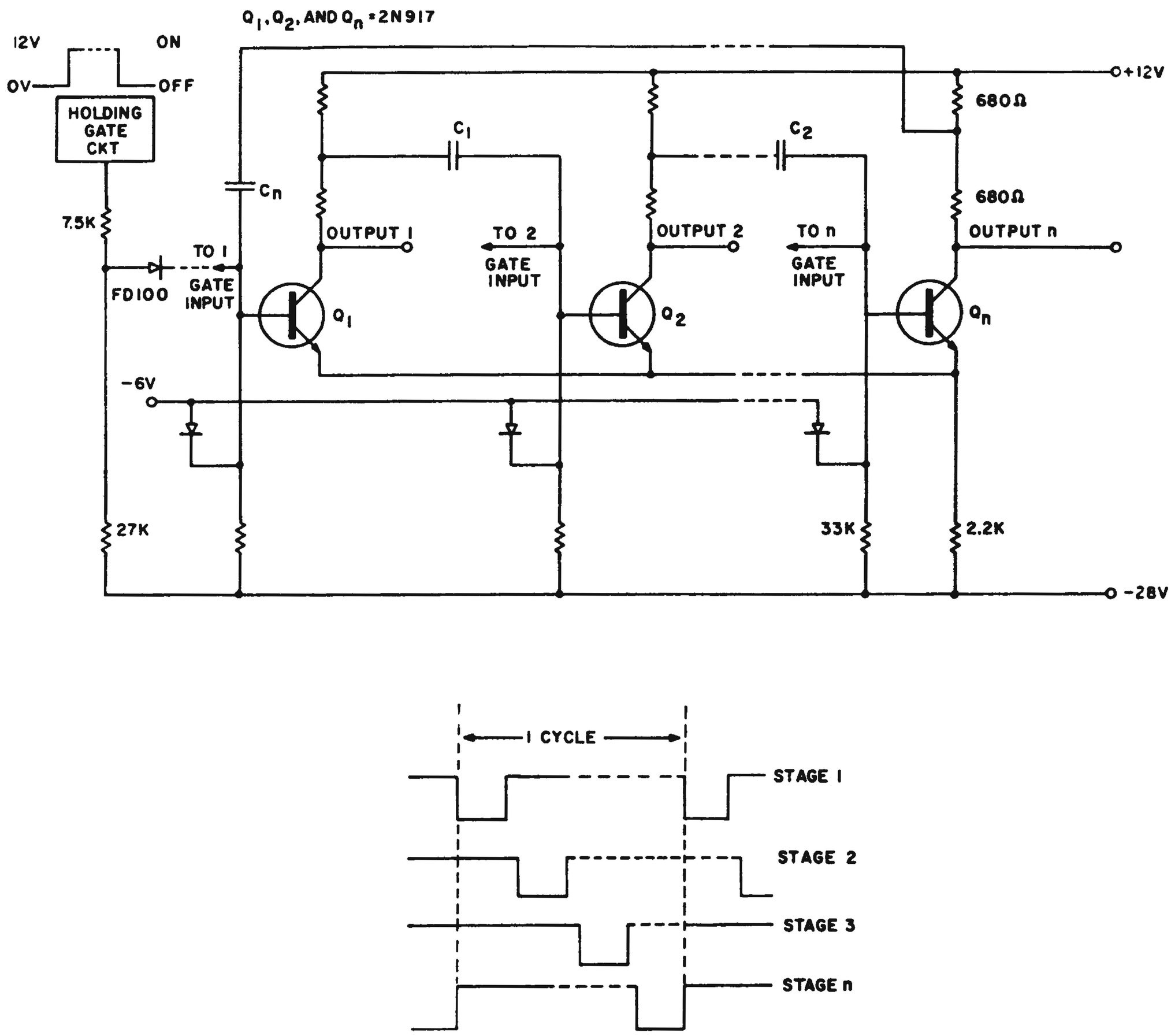

Ring multivibrator produces sequential output pulses whose widths are independently variable.