Jan. 6, 1970 R. E. McMAHON 3,488,644

NON-DESTRUCTIVE READ-OUT CIRCUIT FOR A MAGNETIC MEMORY CORE

Original Filed Feb. 10, 1960 5 Sheets-Sheet 1

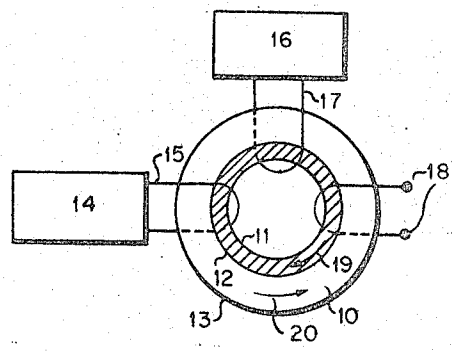

FIG. 1

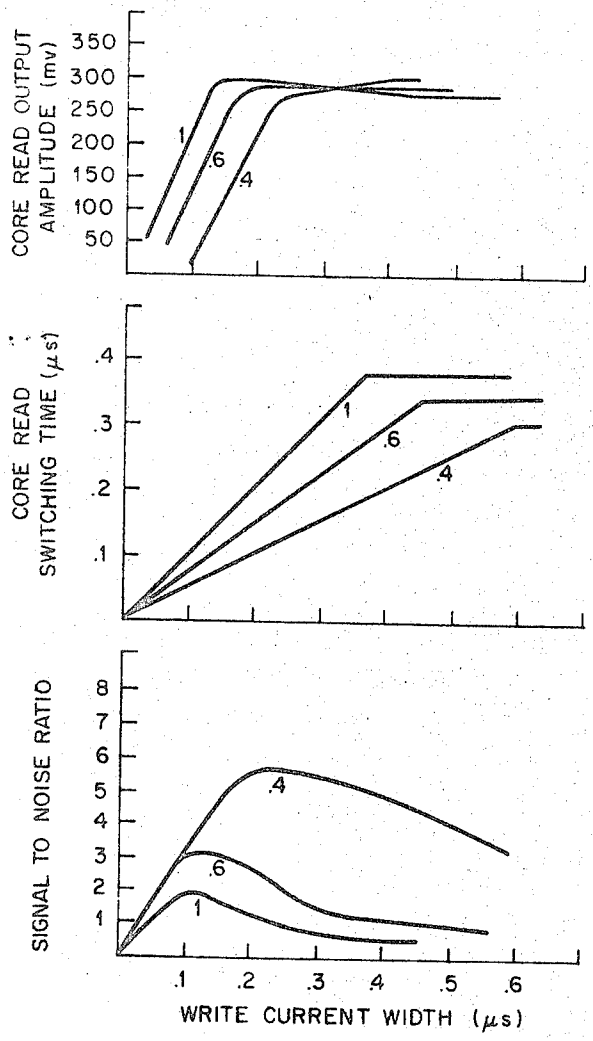

FIG. 2

INVENTOR.
ROBERT E. McMAHON
BY
Martin De Santa
Atty.

NON-DESTRUCTIVE READ-OUT CIRCUIT FOR A MAGNETIC MEMORY CORE

Original Filed Feb. 10, 1960 5 Sheets-Sheet 2

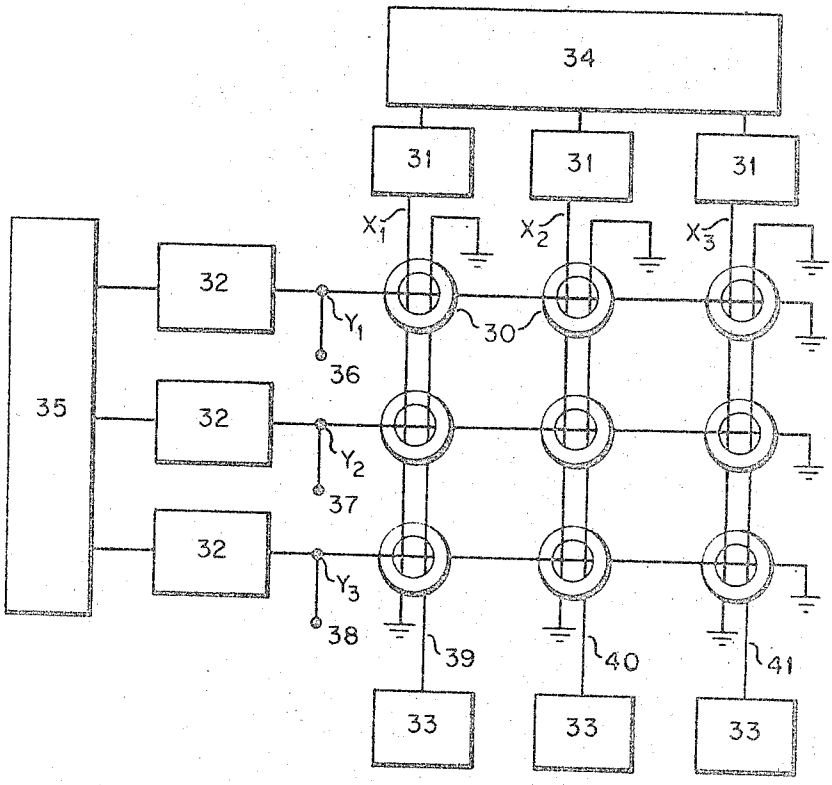

FIG. 3

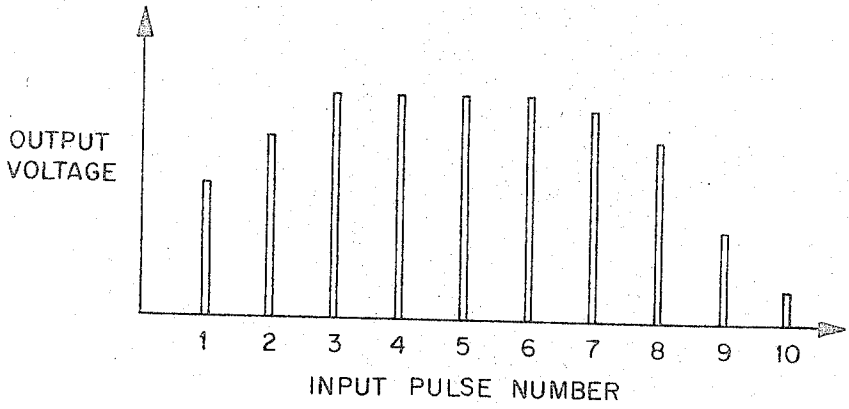

FIG. 4

INVENTOR.
ROBERT E. McMAHON
BY

NON-DESTRUCTIVE READ-OUT CIRCUIT FOR A MAGNETIC MEMORY CORE

Original Filed Feb. 10, 1960 5 Sheets-Sheet 3

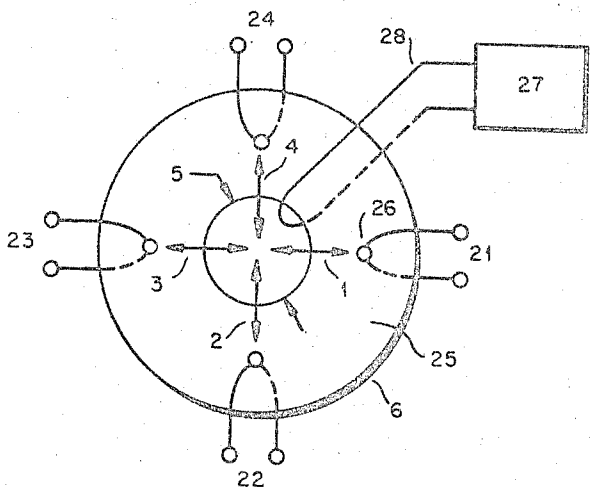

FIG. 5.

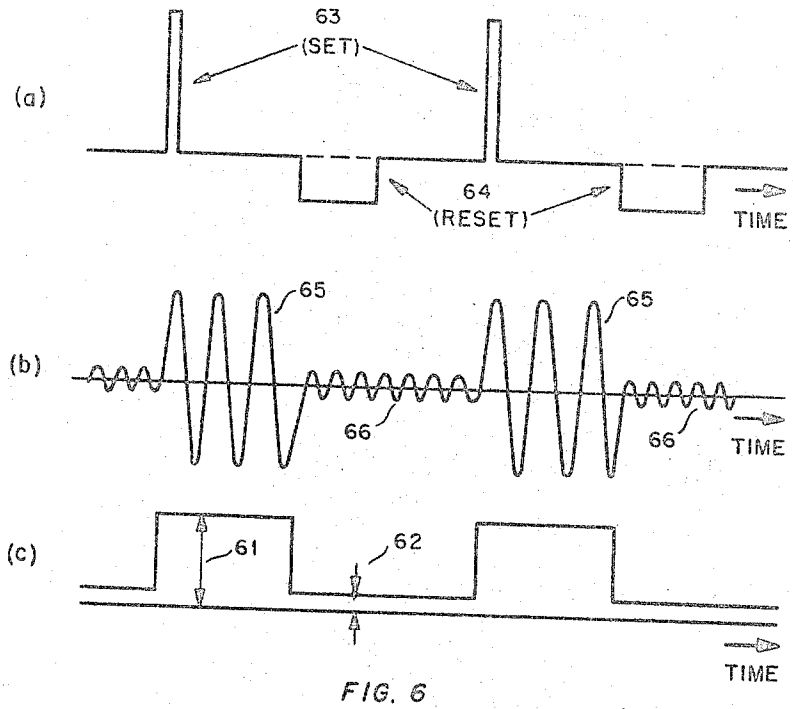

FIG. 6.

INVENTOR.
ROBERT E. McMAHON
BY
Atty

NON-DESTRUCTIVE READ-OUT CIRCUIT FOR A MAGNETIC MEMORY CORE

Original Filed Feb. 10, 1960 5 Sheets-Sheet 4

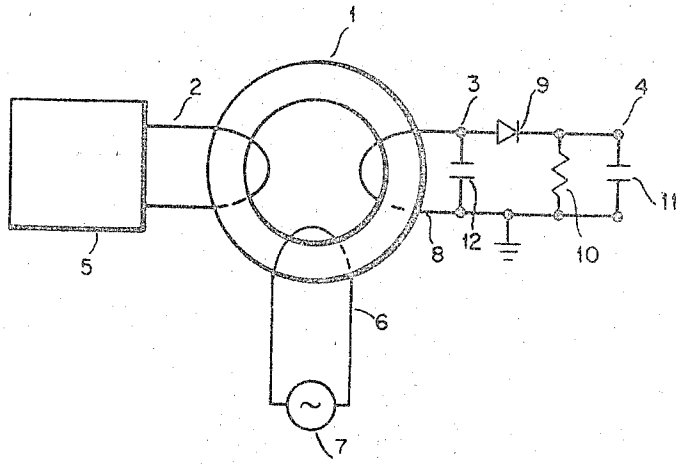

FIG. 7

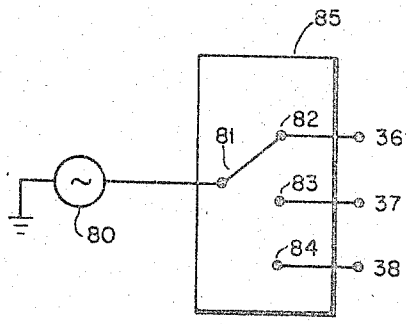

FIG. 8

INVENTOR.
ROBERT E. McMAHON
BY
Martin D. Hunter
atty

NON-DESTRUCTIVE READ-OUT CIRCUIT FOR A MAGNETIC MEMORY CORE

Original Filed Feb. 10, 1960 5 Sheets-Sheet 5

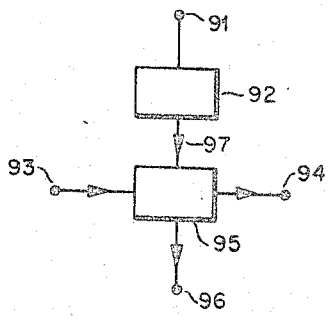

FIG. 9

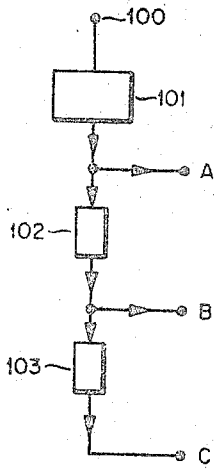

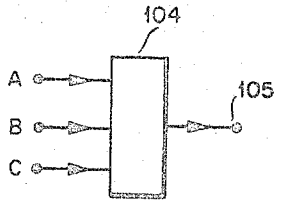

FIG. 10

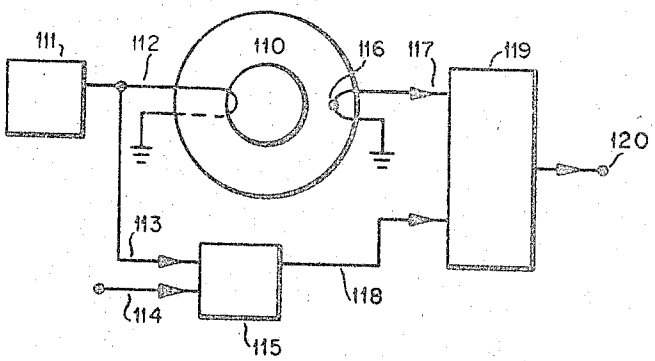

FIG. 11

INVENTOR.
ROBERT E. McMAHON
BY
Martin J. Hunter
Atty

United States Patent Office 3,488,644
Patented Jan. 6, 1970

3,488,644

NON-DESTRUCTIVE READ-OUT CIRCUIT FOR A MAGNETIC MEMORY CORE

Robert E. McMahon, Dunstable, Mass., assignor to Massachusetts Institute of Technology, Cambridge, Mass., a corporation of Massachusetts

Original application Nov. 27, 1964, Ser. No. 415,567, now Patent No. 3,281,802, dated Oct. 25, 1966, which is a continuation of application Ser. No. 7,862, Feb. 10, 1960, now abandoned. Divided and this application Aug. 8, 1966, Ser. No. 608,465
Int. Cl. G11b 5/00
U.S. Cl. 340—174 4 Claims

ABSTRACT OF THE DISCLOSURE

The magnetic state of a magnetic core having a rectangular hysteresis loop is determined without destroying the state by the application of a high frequency sine wave of current to a coil wound on the core and simultaneously determining the amplitude of the signal of the same frequency induced in another coil wound on the core. The magnitude is significantly greater when the core is in the partially switched state as contrasted to its completely switched state. The partially switched state is produced by a magnetizing force greater than required to completely switch the core but of time duration shorter than that required for the core to completely switch.

This application is a division of application Ser. No. 415,567, filed Nov. 27, 1964 for Magnetic Memory Core, now U.S. Patent No. 3,281,802, which was a continuation of application Ser. No. 7,862, filed Feb. 10, 1960.

This invention concerns a storage and selection system for digital information which uses coincident current energization for storage of information in magnetic cores which are arranged in multi-coordinate groupings.

Existing storage and selection systems for digital information which use rectangular hysteresis loop magnetic material for storage are generally of the coincident current selection type. That is, a particular core of a planar array of cores in rows and columns is energized by the superposition of a current in a wire energizing the cores in a given row, and a current on a wire energizing the cores in a given column. Each of the currents are equal in amplitude and of insufficient magnitude individually to cause a substantially permanent change of flux in any core. However, when time superimposed, the sum of the currents is sufficient to cause saturation of flux in the core located at the intersection of the row and column. A more detailed description of this conventional type of core memory may be found in Patent No. 2,736,880 to Jay W. Forrester.

Systems of the type described above have been developed to provide high speed access to very large stores of information. The speed of access to successive words of a memory is limited to a large extent by the switching time (time required for flux reversal) of the magnetic cores. Since the switching time is dependent upon the composition and geometry of the rectangular loop magnetic material, much effort has been expended to reduce the switching time through control of these parameters. Development efforts have produced a ferrite magnetic material which has a switching time in the order of one microsecond and good rectangular loop characteristics. Further reduction of switching time through variation in geometry and composition appears improbable. The total cycle time for a read-write operation is approximately six microseconds for a conventional coincident current memory.

The present invention allows the use of coincident current type memories without the speed of operation limitation imposed by the switching time of magnetic cores when conventionally operated. More specifically, a coincident current memory is described which increases speed of operation by switching the flux in only a portion of the core in less than the conventional switching time by the action of the magnetizing force resulting from the time coincidence of a short time duration, large amplitude current pulse (called an "impulse" of current) and a relatively long time duration, low amplitude current pulse.

Accordingly, the principal object of this invention is to provide a system which substantially increases the speed of operation of coincident current type magnetic core memories.

Reliability of a magnetic core memory is equally as important as speed of operation since both are necessary to a useful system. Since reliability is determined in part by the ability of read-out sensing apparatus to readily determine whether a binary "1" or "0" had been stored in a particular magnetic core, a memory system which provides large "1" to "0" (signal-to-noise) ratios, is desirable.

It is a further object of this invention, therefore, to provide a memory system having higher signal-to-noise ratios than memory systems heretofore available.

Attempts to increase speed of operation of a magnetic core memory in existing systems are principally directed to minimizing the time taken by operations other than switching the core. As a consequence of the resulting high duty cycle, the heat energy produced by the losses in the core because of flux switching causes a temperature rise in the cores with consequent change in magnetic properties.

An object of this invention is to provide a memory system which dissipates less power at higher speeds than existing systems.

Another object of the invention is to provide a novel and effective memory system having non-destructive read out capabilities.

Another object of this invention is to provide a memory element which will allow the information stored in said element to be read out more than once before the information is destroyed.

Still another object of this invention is to provide a magnetic storage element which will act as an accumulator of pulses applied thereto.

These and other objects are achieved, according to a feature of the invention, by applying to a magnetic core, a current pulse of short duration and of large amplitude controlled to produce flux reversal in only a portion of the magnetic core.

A typical embodiment of magnetic elements operating in accordance with the invention is a coincident current magnetic storage system. The storage function its accomplished by only partially changing the flux state of the core, i.e., partial switching. Partial switching of a core is accomplished by time coincidence of the impulse of current and a pulse current of smaller amplitude and longer time duration.

Another embodiment of the invention involves a magnetic element for a multiple-pulse read out circuit whose operation depends upon the application of a series of impulses of current to produce a corresponding series of output pulses until core saturation is reached.

Another embodiment of the invention uses a core having one or more sense windings which functions as an accumulator of impulse currents.

Still another embodiment which features partial switching of a core by an impulse of current is a magnetic circuit which allows non-destructive sensing of the digital information contained in the magnetic state of the core.

Other objects and features of the invention will be

pointed out in the following description and claims and illustrated in the accompanying drawings, in which:

FIGURE 1 is a magnetic core showing a region of reversed magnetization.

FIGURE 2 shows curves which illustrate the magnetic core characteristics as a function of "write" current width.

FIGURE 3 is a linear selection (word organized) memory system which illustrates a circuit for practicing the present invention.

FIGURE 4 illustrates the train of output pulses obtained with multiple read out operation.

FIGURE 5 illustrates the embodiment which functions as an accumulator of input pulses.

FIGURE 6 shows the waveforms obtained from the non-destructive read out embodiment of the invention.

FIGURE 7 is a simple nondestructive read out circuit.

FIGURE 8 illustrates an embodiment which adapts non-destructive read out to a linear selection system such as shown in FIGURE 3.

FIGURE 9 is a sensing circuit for multipulse read output operation.

FIGURE 10 is another sensing circuit for multipulse read output operation.

FIGURE 11 is an embodiment of an input pulse current monitor.

The embodiments of this invention are based upon a utilization of the magnetic properties of a ferrite core having rectangular hysteresis loop characteristics when the core is subject to magnetizing forces of the particular kind used in the embodiments. More specifically, magnetic core circuits have been built in which the magnetizing force is produced by a current of large amplitude and short time duration, an impulse of current.

FIGURE 1 shows a magnetic core **10** with its original flux state shown by direction arrow **20**. If a pulse of current is produced in winding **15** by pulse generator **14**, so as to produce a magnetomotive force greater than the coercive force in the direction shown by direction arrow **19**, the flux in core **10** will reverse from direction **20** to direction **19** beginning at the inner surface **11** of the core and progressing at a finite rate to the outer surface **13**. If the pulse current from generator **14** is terminated before the flux has reached the outer surface **13**, there will be an annular region **12** shown cross hatched when the flux is in the direction **19**. The flux is the remainder of the core **10** will be in the original direction **20**. The embodiments of the present invention employ circuits which are fundamentally dependent upon this "partial switching" of flux direction and the magnetic characteristics peculiar thereto.

Experiments have shown that the coercive force of the magnetic material increases with decrease of the applied current pulse width. The amplitude of a narrow pulse of current produces a magnetizing force much larger than the normal coercive force of the material without switching a noticeable percentage of the flux. The normal (quasi-static) coercive force is defined as that value of coercive force obtained when the magnetizing force is produced by a slowly varying or a direct current. At very narrow widths of pulse current only reversible (non-permanent) flux changes take place, even with amplitudes several times greater than the normal coercive force.

One possible embodiment of this invention is in the form of a magnetic core memory element. The use of a magnetic core for a memory element is not new, in particular, the use of a coincidence current technique for energizing a particular core in a planar array is well known. However, these known memory systems are being operated with slower speeds, less reliability and higher power dissipation than is possible with the mode of operation of the present invention. These deficiencies exist in spite of efforts to reduce core material switching time and circuitry time delay because of a failure to operate the cores in accordance with the method of the present invention.

In order to illustrate the principle of the present invention, certain electrical characteristics of the partially switched magnetic core **10** of FIGURE 1 are shown in FIGURE 2. Partial switching is accomplished by the time coincidence of two aiding magnetizing forces, one magnetizing force being produced by a short time duration, high amplitude pulse of surrent in winding **15** from generator **14** which is designated as the "write" current, the other magnetizing force being produced by a wider, low amplitude current in winding **17** from generator **16** called the "exciter" current. It is understood that the time coincidence is obtained by those timing techniques well known to the art which regardless of refinements in detail ultimately require some form of timing pulse generator **42**. The partially switched core **10** is subsequently returned to a state of flux saturation in the direction **20** by a current in winding **15** from generator **14** called the "read" current. The read current is similar in amplitude and time duration to the write current but flows in the opposite direction through winding **15**. The characteristics of the output voltage at terminals **18** are plotted as a function of write current width in FIGURE 2. By way of definition, the "core read switching time" of FIGURE 2 is the time duration of the output pulse at terminals **18** produced by the read current measured between the 10% peak amplitude values. The signal-to-noise ratio is defined as the ratio of the voltage at terminals **18** produced by the read current after partial switching by the time coincidence of the write and excite currents and the voltage produced by the read current after application of the write current alone.

The pulse characteristics of FIGURE 2 are obtained by applying a write current of 0.4, 0.6, and 1.0 ampere magnitude and variable width, an exciter current of 250 ma. at 0.8 μsec., and a read current of 1 ampere at 0.4 μsec. to a ferrite core ($Mg_{0.81}Mn_{0.47}Fe_{1.71}O_4$) of 50 mils outside diameter, 30 mils inside diameter and 15 mils thickness. The exciter current when present is applied in time coincidence wth the write current and need only be slightly wider than the write current. The exciter current value produces a magnetizing force approximately one-half the value of the coercive force. The coincidence of a write and exciter current causes partial switching during the time the write current is applied. However, the absence of the exciter current drastically reduces the value of flux switched. The amount of the reduction determines the signal-to-noise ratio as previously defined.

As an example, reference to FIGURE 2 shows that using a write current value of approximately 0.6 amp., 0.15 μsec. results in a signal-to-noise ratio of nearly three when the exciter current is about 250 ma. (It may be noted that the signal-to-noise ratio increases to approximately 4.5 if the read current is increased to 1.5 amperes.) The exciter current need only be slightly wider than the write current but was maintained at a constant width of 0.8 μsec. for convenience in securing the data of FIGURE 2. The corresponding read voltage at terminals **18** was 250 mv. with a switching time as previously defined of only slightly over 0.1 μsec. Therefore, the read current could be reduced to this width (approximately 0.1 μsec.) without affecting the output voltage. Thus, the total read-write cycle time is only slightly over 0.25 μsec.

The data represented by the curves of FIGURE 2 and other experimental data indicate that usable signal-to-noise ratios (minimum of approximately three to one) may be obtained with write current pulse amplitudes of 400 ma. to one ampere approximately, and about 0.1 to 0.4 μsec., exciter current pulse amplitudes of 100 ma. to 250 ma., and read current pulse amplitudes of one to two amperes.

The maximum amplitude and the minimum time duration of the write current pulse have not been clearly defined by experiments. The principal difficulty being the generation of high amplitude current pulses with rise times

that are negligible compared to the total pulse width. Present experimental circuitry has a rise time of approximately 40 millimicroseconds for a 100 millimicrosecond pulse of 1 ampere magnitude. The ultimate limitation on the write current occurs when, acting in concert with the excite current, the flux produced thereby is reversible, i.e., the flux in the core will revert to its former state after removal of the magnetizing force.

The exciter current need be only slightly greater in time duration than the write current if jitter and time delays are negligible. The lower values of exciter current (approximately 100 ma.) result in larger maximum signal-to-noise ratios but at a sacrifice in speed (wider write pulse current required at optimum).

The larger values of read current pulse amplitude appear preferable since higher signal-to-noise ratios and reduced switching time result. The minimum amplitude of the read current is determined by the requirement that the read current switch all the flux in the core to saturation during the time it is applied.

Since the write current has short time duration and high amplitude (also the read current), the above described technique of flux switching in a portion of a magnetic core is termed the "impulse mode" of partial core switching or alternately "partial switching." It is to be understood that these terms are used interchangeably.

A preferred embodiment of magnetic cores in a memory system which uses partial switching in accordance with the invention is shown in FIGURE 3. The system of FIGURE 3 is known to those skilled in the art as a "linear selection" or "word organized" memory. The magnetic cores **30** are arranged in rows and columns, the "words" of the memory being the rows and the binary digits of the words being the columns. FIGURE 3 shows a 3 x 3 array of cores for convenience of illustration only; an actual memory system is not limited to such few cores. As an example, but not as a limitation, a memory consisting of 1040 words of 80 bit length has been successfully operated with a read-write cycle time of 500 millimicroseconds.

To understand the operation of the embodiment of the invention shown in FIGURE 3, assume that a binary word 101 is to be written into the row of cores threaded by wire Y_2. Any word that may have been in this row of cores is first erased by a read current pulse on wire Y_2 from pulse generator **32** connected thereto. All these cores then may be said to be in the "0" state. Pulse generator **32** connected to wire Y_2 is actuated by a signal from the word selection matrix **35**. A write current pulse (opposite in direction to the read pulse) is generated by the same pulse generator **32** at the termination of the read pulse. The digit pulse generators **31** generate the excite pulse currents on lines X_1, X_2 and X_3, each of which thread one column of cores, in accordance with control signals from the digit selection matrix **34**. Since the digit information is 101, only those two pulse generators **31** which are connected to wires X_1 and X_3 are energized by a signal from matrix **34**. Matrices **34** and **35** are of the type familiar to those skilled in the art and do not constitute part of the invention. It is necessary that the excite current pulses on wires X_1 and X_3 and the write current pulse on wire Y_2 occur in time coincidence in order to get partial switching on cores at the intersection of wires X_1, Y_2 and X_3, Y_2 in accordance with the invention. The time coincidence is produced by causing the signal from word selection matrix **35** and digit selection matrix **34** to be synchronized by timing pulse generator **42**. The core at intersection X_2, Y_2 will have a magnetizing force produced by the write current only. Thus, the word 101 is written into the row of cores threaded by wire Y_2 as represented by their degree of magnetization. Sense wires **39**, **40** and **41** which thread the digit cores supply pulse signals to their respective sense amplifiers **33** upon the application of a read pulse current by a selected pulse amplifier **32**.

Circuit diagrams showing the details of the digit (excite) pulse current generator **31**, the word (write) pulse current generator **32** and the sense amplifier **33** appear in a report of the work done in furtherance of this invention in the Wescon Convention Record, part 4, August 1959, pages 3 through 15, by V. J. Sferrino.

The current amplitudes and widths used in the system of FIGURE 3 are in the general range of the values indicated as desirable in the discussion of FIGURE 2. The amplitude of the exciter current must be sufficiently small so that no cumulative flux change in a core threaded thereby occurs because of the repeated application of said exciter current as would occur in a linear selection memory system. There is no accumulation of flux in cores because of repeated applications of a write current threading said cores because each write current is preceded by a read current which returns the core to a "0" state of saturation.

A coincident current memory system of the conventional type which uses coincidence techniques for reading information out of magnetic cores as well as writing into said cores can be adapted by those skilled in the art to operate with the impulse current mode of switching in accordance with the invention. The operation of such a system would require the use of the usual inhibit current which would be made equal to the excite current. There would be an additional requirement that the write current and the read current produce no cumulative flux change in the cores which are threaded by the wires carrying said currents. This requirement of no cumulative flux change is satisfied in the conventional coincident current memory system by limiting the coordinate currents to a value which produces a magnetizing force of approximately one-half the coercive force. When impulse current switching is used, the requirement may be restated by saying that the read and write current pulses acting alone (not aided by the excite current) must produce a reversible flux change in the cores upon which they act. It can be readily appreciated that the read and write current pulses must be much more accurately controlled to achieve this result than when the linear selection memory system is used with impulse current switching. Linear selection is also a preferred embodiment of the invention since the read current may be much greater than in conventional coincident current memory systems. Faster switching and greater signal-to-noise ratio result therefrom.

Another embodiment of the invention called a multiple-pulse read out circuit may be illustrated by referring to FIGURES 1 and 4. Pulse generator **16** produces a current in winding **17** which saturates core **10** with flux in direction **20**. Pulse generator **14** produces a succession of impulses of current in winding **15**, each impulse capable of producing a nonreversible flux change in direction **19** in radially expanding annular regions such as region **12**. Each time the amount of flux in direction **19** increases, there is a corresponding pulse voltage at terminals **18**. FIGURE 4 shows the approximate manner in which the core output voltage at terminals **18** varies with successive applications of typical pulse currents of 800 ma. at 0.06 μsec. in winding **15** from generator **14**. The voltage output at terminals **18** is relatively constant for about eight pulses after which saturation in the direction **19** occurs and the output voltage drops to a comparatively small value.

The above described mode of operation of FIGURE 1 can be applied to the linear selection system of FIGURE 3. The write current pulse is adjusted to an amplitude and time duration which when applied in time coincidence with an exciter current pulse will produce flux reversal over a substantial portion of the core. For instance, a typical value of write current would be 0.6 ampere at 0.2 μsec. and an exciter current of 250 ma. Time coincidence of these two currents will produce flux reversal over approximately one half of the core.

Subsequent application of five or six typical read current pulses of 800 ma. at 0.06 μsec. would produce three or four equal amplitude output pulses on the sense wire. An excess number of read pulses to useful output pulses would insure that the core was well into saturation at the end of the read time interval, a situation which improves the signal-to-noise ratio of a subsequent read-write cycle of operation. The pulse generators **32** of FIGURE 3 could easily be constructed by one skilled in the art to produce a fixed number of equally spaced read current pulses when so instructed by selection matrix **35**.

Multipulse output operation can also be applied to a conventional coincident current read-write memory system by applying the methods described previously.

Multiple-pulse read output operation is highly advantageous in a memory system where the read output voltage pulse must be detected in a noisy background in which the noise pulse level is comparable to the desired signal pulse level. In a situation of this kind, the presence of a uniformly spaced sequence of output pulses can be detected more reliably than a single pulse. Modifications of the output pulse sense amplifiers **33** of FIGURE 3 to fully utilize the information in the series of output pulses may assume many forms. A preferred form of sense amplifier for multiple-pulse operation is shown in FIGURE 9. The sense wire **39** of FIGURE 3 is connected to input terminal **91** of FIGURE 9. The output pulses of sense wire **39** appearing at terminal **91** are amplified by amplifier **92**. The amplified pulses are transferred to counter **95** by wire **97**. The counter **95** starts to count pulses on line **97** when it receives a "start count" pulse at terminal **93**. The "start count" pulse may be the same pulse that starts the sequence of read pulses from generator **32** of FIGURE 3. A "stop count" pulse at terminal **94** resets counter **95** to a zero count after a predetermined number of read pulses have occurred. The counter **95** is designed to give an output indication at terminal **96** when a specified number of pulses on line **97** have been received in the time interval during which the counter is "on."

Another form of sense amplifier for multiple pulse operation is shown in FIGURE 10. The pulses on the sense wire **39** of FIGURE 3 are applied to terminal **100** of FIGURE 10. The pulses are amplified in amplifier **101** before transfer to a series connection of delay lines **102, 103**. The delay time of delay lines **102, 103** is equal to the time interval between the read current pulses of generator **32** of FIGURE 3. If three consecutive output pulses appear at terminal **100**, the action of delay lines **102, 103** will cause the pulses to be coincident in time at terminals A, B, and C. If terminals A, B, and C are connected to corresponding terminals of "and" circuit **104**, a pulse will appear at terminal **105**. FIGURE 10 may easily be modified so that the presence of only two out of three pulses at terminal **100** will cause an output pulse.

Another embodiment of the invention is shown in FIGURE 5 where the inverse of the multiple read out technique is used to provide a pulse accumulator. Successive applications of impulse currents to a core result in switching larger portions of the core until it reaches saturation. If the output coil of the core is coupled to the input coil by the flux in the core, no output voltage will occur when saturation is reached. Alternatively, this write technique can be used on a core which has a series of radially spaced, circumferentially distributed small sense holes. The presence of an ouput from a wire threading a particular sense hole indicates that a certain minimum number of write pulses has been received. FIGURE 5 shows a core configuration which illustrates the multiple sense hole technique.

Typically, the ferrite core **25** has an inside diameter **55** of 30 mils, an outside diameter **56** of 215 mils, and a sense hole **26** diameter of 5 mils. Four sense holes **26** are at radial distances **51, 52, 53,** and **54** of 32, 49, 70 and 88 mils respectively. Output sense windings **21, 22, 23, 24** thread each of the four sense holes. The input impulse currents are provided by generator **27** to input winding **28**.

In accordance with this invention, a pulse current of the proper magnitude and duration on winding **28** will cause an output in winding **21** but substantially no output in windings **22, 23** and **24**. A second pulse will produce an output in windings **21** and **22** but substantially no output in windings **23** and **24**. This process will continue until saturation causes all windings to have substantially no output. The core must be reset periodically by a reverse current in winding **28** if continuous operation is desired.

One application where an accumulator of this type is needed is to perform the function of a pulse amplitude and duration monitor. Since proper operation of many magnetic core circuits is dependent in a great number of instances on closely controlled drive pulse amplitude and duration, a device which will automatically monitor the drive pulse is desirable. The device of FIGURE 11 can be used as a monitor if the output of winding **117** is time coincidence compared in an "and" circuit **119** with a predetermined one of the successive drive pulses occurring subsequent to a reset pulse. The pulse to be compared in "and" circuit **119** is obtained by counting the drive pulses appearing on line **113** in counter **115** which produces a pulse on line **118** at a predetermined count. The counter is reset to zero by a pulse on line **114** prior to a reset current in winding **112** being applied to core **110**. If the drive pulse from generator **111** is of the proper amplitude and duration, a voltage output should exist on winding **117** in time coincidence with a pulse on counter output wire **118**. If there is coincidence, a coincidence circuit (an "and" circuit) **119** output pulse at terminal **120** would signify that the drive pulse current is proper. Locating the output winding sense hole **116** a distance from the edge of the core slightly less than the radial distance traversed by the flux per drive pulse has several advantages. The first is that any deviation of the drive pulse from normal is effectively amplified by the summation process produced by the number of pulses required for flux to reach the output winding. Another advantage is that core saturation would occur after an output pulse one winding **117**, and hence only one pulse would come from the output winding. Thus the comparator would be capable of detecting drive pulse deviations whether they be greater or lesser in amplitude and duration than the desired drive pulse.

The use of the magnetic circuit of FIGURE 5 as a counter circuit for pulse currents of fixed amplitude and duration is apparent. Winding **21** would produce a voltage for the first and subsequent pulses. Winding **22** would produce a voltage for the second and subsequent pulses, and so on. The pulse count would be determined by the radial position of the last winding to produce an output voltage.

It is to be understood that the size of the magnetic core **25** and other dimensions of FIGURE 5 are for purposes of illustration. The maximum number of sense holes **26** is limited by the minimum diameter of the sense holes, the core size and the minimum radial flux traversal per drive pulse which will give sufficient resolution between output pulses of radially adjacent sense windings.

Another embodiment of the present invention, FIGURE 7, is a non-destructive read out circuit which uses the special magnetic properties obtained by partially switching a core by a current pulse of large amplitude and short time duration. If a high frequency sine wave of current is applied to a winding of a core which has been partially switched by an impulse current, the output of a second winding on this partially switched core will be much larger than the output when the core is saturated. The ratio may be in the order of fifteen to one if stray coupling between

input and output windings is minimized. However, it is found that if instead the core is partially switched to the same extent by a direct or relatively slowly varying current, the output voltage with the same sine wave excitation is not as large as when the partial switching is produced by an impulse of current. It is believed that the high pulse current nucleates a greater number of magnetic domains throughout the core than a low current. The nucleated domains are thought to be the medium for the transfer of the sine wave input to the output; the greater the number of nucleated domains, the greater the coupling between input and output windings.

FIGURE 7 shows one possible embodiment of a sine wave non-destructive read out circuit. Pulse generator **5** produces an impulse current **63** of FIGURE 6*a* in winding **2** which effects a flux change in a portion of magnetic core **1**. A sine wave current generator **7** applies an alternating magnetic field to core **1** by an alternating current in winding **6**. Since the core **1** has been partially switched by the current **63**, a sine wave voltage of relatively large amplitude **65** of FIGURE 6*b* will occur at terminal point **3** of output winding **8**. Rectification of the sine wave at point **3** by diode **9** produces a direct voltage **61** of FIGURE 6*c* across the parallel resistor **10** capacitor **11** combination at terminal point **4**. If a current **64** of FIGURE 6*a* of amplitude and duration sufficient to produce saturation is subsequently produced in winding **2** by generator **5**, a sine wave voltage **66** of FIGURE 6*b* of relatively small amplitude will occur at terminal point **3**. The direct voltage **62** of FIGURE 6*c* at terminal **4** is considerably smaller than the voltage **61**. The different values of the voltages **61** and **62** indicate the magnetic state of the core. A partially switched core may arbitrarily be said to represent a binary "1" and a core in the saturated state a "0." Thus, a high level direct voltage **61** would indicate the presence of a "1," and the low level direct voltage **62** a "0." Although not shown on FIGURE 7, voltage level sensitive apparatus, such as a pulsed "gate," connected to terminal **4** could transform the large direct voltage **61** into a pulse for transmission to other circuitry whereas the small direct voltage **62** would not cause a pulse to be generated. The capacitor **12** when properly adjusted causes the sine wave voltage **65, 66** at terminal **3** to peak, probably because of a resonance with winding **8**.

Typical values of a non-destructive read out circuit such as shown in FIGURE 7 are a 50 mil inside diameter, 80 mil outside diameter ferrite core **1**; capacitor **12**, 200 to 500 $\mu\mu$fd. adjusted for optimum voltage at terminal **3**; capacitor **11**, 920 $\mu\mu$fd.; alternating current ampere turns on winding **6**, 700 ampere turns; winding **8**, 15 turns; current **64**, 1 ampere turn at 1.0 μsec. width; current **63**, 1 ampere turn at 0.2 μsec. width; frequency of sine wave current source **7**, 10 mc.

The utilization of the circuit of FIGURE 7 as a flip-flop (multivibrator) device is apparent from the fact that it has two stable states either of which can be selected by a current pulse **63** or **64** applied thereto. This particular flip-flop would have the advantage that the sine wave driving power need not be applied continuously in order to retain the magnetic state stored in the core.

FIGURE 8 shows in simple form a circuit arrangement which adapts the previously described linear selection memory system of FIGURE 3 to have a non-destructive read type of memory. The read current pulse on the Y drive wires of FIGURE 3 would be used to clear out information stored in any particular word when non-destructive read out is used instead of providing a destructive read out pulse. The terminals **36, 37, 38** of FIGURE 8 are connected to the corresponding terminals of FIGURE 3. A read out selection matrix **85** would determine which of terminals **36, 37** or **38** would be energized with the sine wave current source **80**. For purposes of illustration, a terminal selection switch **81** is used to perform the function of the matrix **85**. If the switch **81** is at position **82**, the information stored in the cores of FIGURE 3 threaded by wire Y_1 will appear as sine wave voltages on wires **39, 40** and **41**. Detectors **33** of FIGURE 3 no longer are pulse amplifiers as when destructive read out was employed but rather consist of the elements **9, 10, 11** and **12** of FIGURE 7 supplemented by "gate" circuitry if pulse outputs are desired from detectors **33**.

While there have been shown and described the fundamental novel features of the invention as applied to preferred embodiments, it will be understood that various omissions, substitutions, and changes in the forms and details of the devices illustrated and in its operation may be made by those skilled in the art without departing from the spirit of the invention.

What is claimed is:

1. A non-destructive read out magnetic core storage element comprising, a magnetic core having square loop hysteresis properties, a first means for applying to said core a first direct current magnetizing force acting alone greater than the coercive force along every closed magnetic path of said core, said magnetizing force being of shorter time duration than the time required for flux traversal in a radial direction from the inside cylindrical surface to the outside cylindrical surface of said core, a second means for applying to said core an alternating magnetizing force having a fundamental frequency to produce an alternating flux variation in said core, a third means responsive to the alternating flux variation of said frequency of said core to provide a signal of said frequency whose amplitude is indicative of the magnetic state of the core.

2. Apparatus according to claim **1** wherein said first means includes a means for applying to said core a second direct current magnetizing force acting alone of opposite direction at a different time from said first magnetizing force, said second magnetizing force being greater than the coercive force of said core and of a time duration sufficient for substantially all the flux of said core to be in the direction of said second magnetizing force, whereby the amplitude of the voltage output of said responsive means at said frequency is indicative of the flux state of said core as being that produced by the first magnetizing force or that produced by the second magnetizing force.

3. Apparatus according to claim **1** wherein said responsive means consists of a wire, a voltage level sensing circuit, said wire threading said core and being connected to said sensing circuit to indicate the magnetic flux state of said core.

4. Apparatus according to claim **2** wherein said alternating magnetizing force is sinusoidal and said alternating flux variation is sinusoidal.

References Cited

UNITED STATES PATENTS

3,027,547	3/1962	Froehlich	340—174
3,116,475	12/1963	Oshima et al.	340—174

BERNARD KONICK, Primary Examiner

GARY M. HOFFMAN, Assistant Examiner